

Illuminated pushbutton actuators; momentary; blue; 24v; 1 N/O; with cable 1m and M12A plug

Part no. C22-DL-B-K10-24-P5
Article no. 181298

Delivery programme

Product range		RMQ compact solution
Basic function		Illuminated pushbutton actuators
Single unit/Complete unit		Complete unit
Design		Flat
		momentary
Connection type		Cable (black) with M12A plug, 4 pole
Cable Length	m	1
Colour		
LED		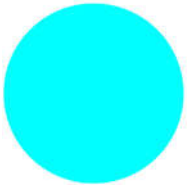
LED		Blue
Button plate		
button plate		Blue
Button plate		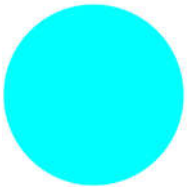
		Blank
Rated operational voltage LED		24 V AC/DC
Name		None
Degree of Protection		IP66, IP67, IP69K (front) IP65 (on rear)
Front ring		Bezel: titanium
Connection to SmartWire-DT		no
Contacts		
N/O = Normally open		1 N/O
Contact sequence		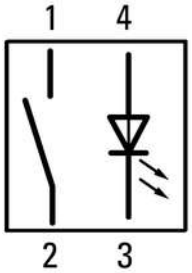
Contact travel ■ = Contact closed □ = Contact open		
Contact diagram		

Technical data

General

Standards		IEC/EN 60947-5-1 VDE 0660

Lifespan, mechanical	Operations	x 10^6	> 5
Operating frequency	Operations/h		3600
Actuating force		n	5
Plug tightening torque		N/m	1
Tightening torque Threaded ring		Nm	2
Climatic proofing			Damp heat, constant, to IEC 60068-2-78 Damp heat, cyclic, to IEC 60068-2-30
Degree of Protection			IP66, IP67, IP69K (front) IP65 (on rear)
Mounting position			As required
Mechanical shock resistance to IEC 60068-2-27 Shock duration 11 ms, half-sinusoidal		g	> 30

Contacts

Rated impulse withstand voltage	U_{imp}	V AC	4000
Rated insulation voltage	U_i	V	250
Overvoltage category/pollution degree			III/3
Control circuit reliability			
At 17 V DC/7 mA	H_F		N/O: 1 failure per 17 × 10^6 switching operations, statistically determined
Max. short-circuit protective device			
Fuse	gG/gL	A	4
Rated conditional short-circuit current	Iq	kA	1

Switching capacity

Rated operational current	I_e	A	
AC-15			
24 V	I_e	A	4
DC-13			
24 V	I_e	A	3
Cable characteristics			
Design			M12A
Cable Length		m	1
Material characteristic			PUR
Diameter	∅	mm	4.7

Design verification as per IEC/EN 61439

Technical data for design verification			
Operating ambient temperature min.		°C	-25
Operating ambient temperature max.		°C	70

Approvals

Product Standards			IEC/EN 60947-5-1; UL 508; CAN/CSA-C22.2 No. 14-05 und 94-M91; CE marking
UL File No.			E29184
UL Category Control No.			NKCR
CSA File No.			165628
CSA Class No.			321103
North America Certification			UL listed, CSA certified
Degree of Protection			1,3R,4X,12,13

Dimensions

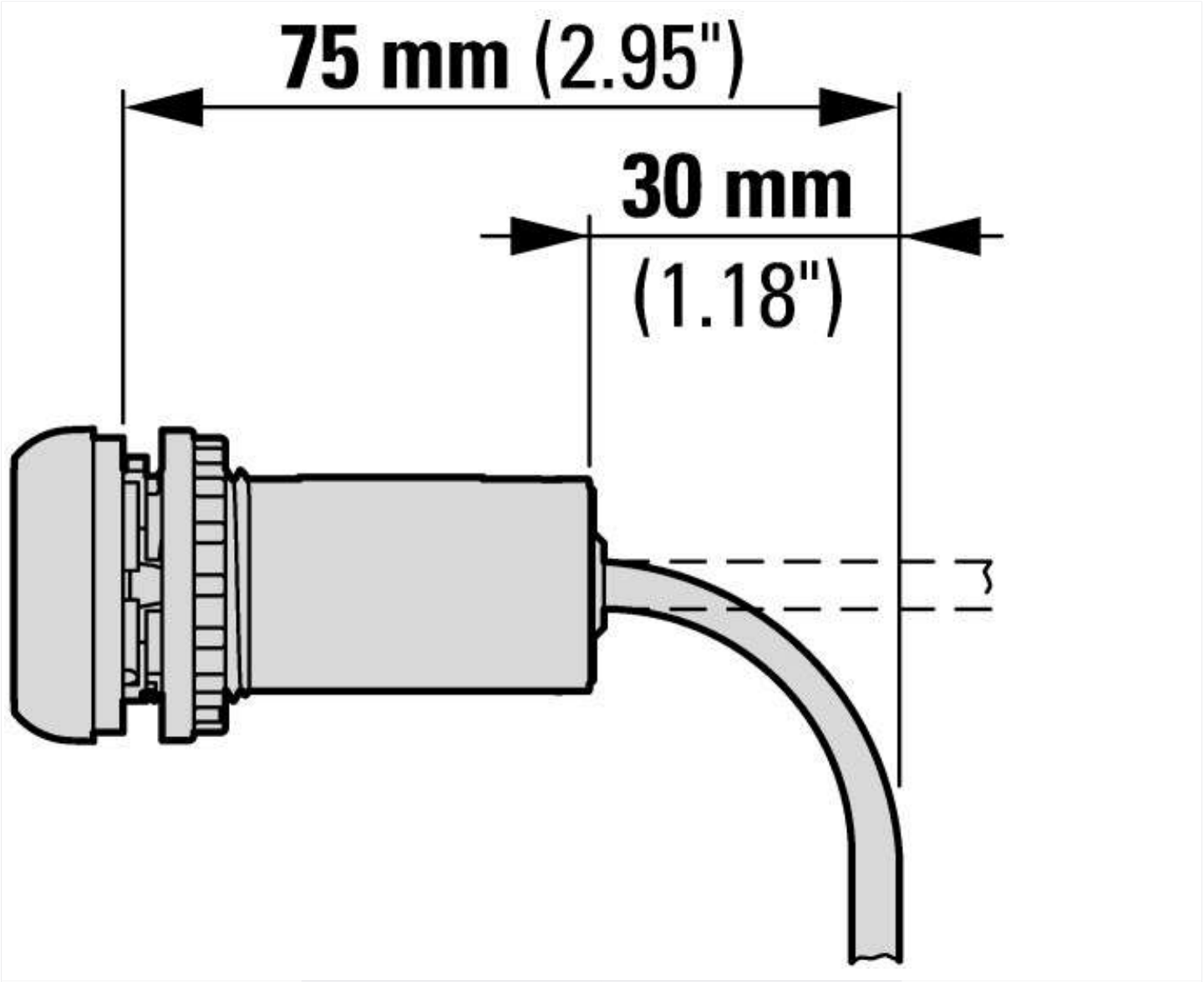

Static: Fixed routing

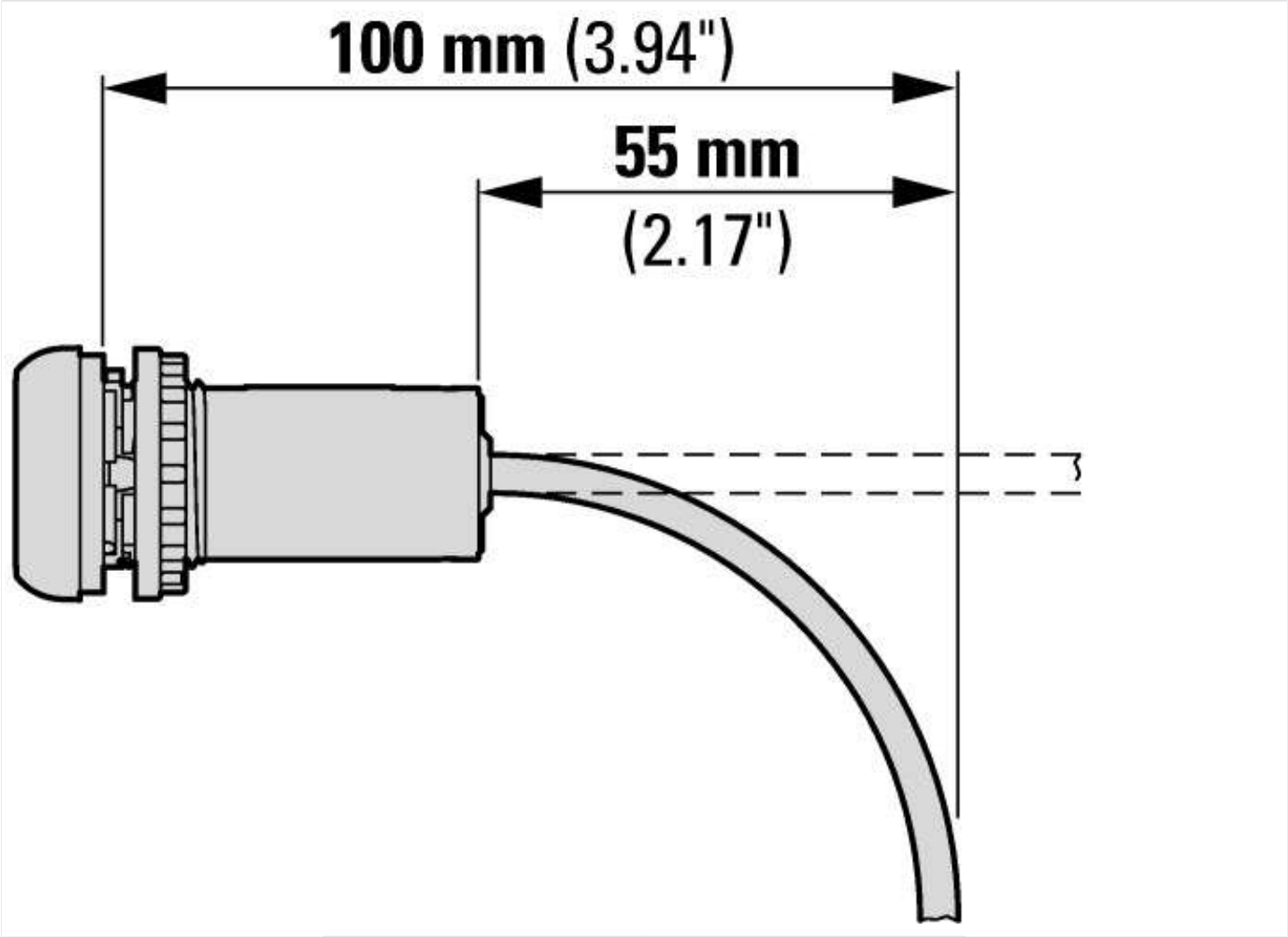

Flexible use

Additional product information (links)

IL047016ZU RMQ compact solution	
IL047016ZU RMQ compact solution	ftp://ftp.moeller.net/DOCUMENTATION/AWA_INSTRUCTIONS/IL047016ZU2016_05.pdf

© 07/2016 by Eaton Industries GmbH