Technical Data
Rope pull switch

Accessory rope pull switch

Rope, galvanised with PVC-jacket

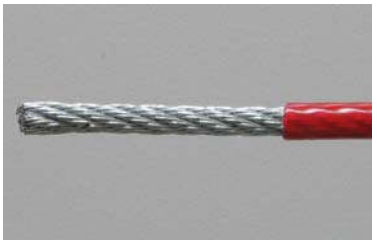

Rope- Ø / jacket- Ø	Design	min. braking force	Art.-No.	Art.-Desc.
D 3 / D 4	acc. to DIN 3055	538 kp	570314	PSEN rs rope d3/d4 50m
D 3 / D 4	acc. to DIN 3055	538 kp	570315	PSEN rs rope d3/d4 100m

Material:	FE-galvanised, strength 1770N/mm² PVC-jacket, red

Pulley block, hinged

Art.-No.	Art.-Desc.
570313	PSEN rs pulley flex

Material:	Zinc-base die-casting alloy (Roller: polyamide)
Plating:	blue passivated, RoHs-conform

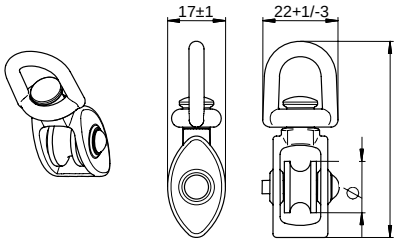

Deflection pulley Ø 75 for rope diameter up to 8 mm

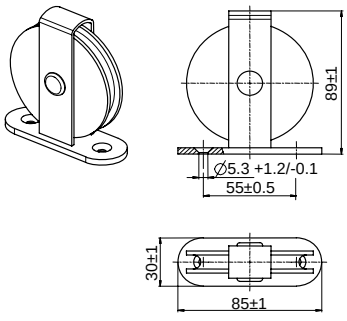

Roller- Ø	Load capacity	Rope- Ø max.	Art.-No.	Art.-Desc..
75 mm	15 kg	8 mm	570312	PSEN rs pulley 75

Material:	Steel /Polyamide
	blue passivated, RoHs-conform

Pilz GmbH & Co. KG, Felix-Wankel-Straße 2, D-73760 Ostfildern / www.pilz.com

Vorlage : 0850174282 Orig. 1

Rope pull spring

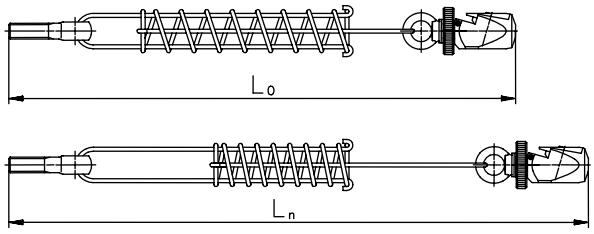

Fn	R	L_0	L_n	Art.-No.	Art.-Desc.
218 N	2,1 N/mm	383 mm	487 mm	570310	PSEN rs spring 175
335 N	1,9 N/mm	483 mm	653 mm	570311	PSEN rs spring 300

Material:	Wire acc. to DIN 2076 – 1.4310
	Rope clamp - Zinc-base die-casting alloy
	Eye bolt acc. to DIN 444 – 4.6
Plating:	Thick-film passivated (except spring), RoHs-conform

Fn : Spring Force at L_n
R : Spring Rate

Pilz GmbH & Co. KG, Felix-Wankel-Straße 2, D-73760 Ostfildern / www.pilz.com