OGT100

Diffuse reflection sensor

OGT-HPKG/US

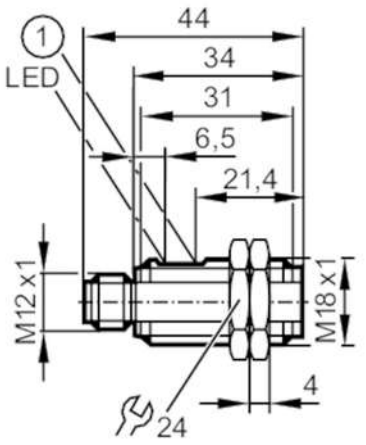

1 potentiometer
receiver in upper lens
transmitter in lower lens

Product characteristics		
Type of light		red light
Housing		threaded type
Application		
Function principle		Diffuse reflection sensor
Electrical data		
Operating voltage	[V]	10...30 DC
Current consumption	[mA]	20
Protection class		III
Reverse polarity protection		yes
Type of light		red light
Wave length	[nm]	645
Outputs		
Electrical design		PNP
Output function		light-on mode
Max. voltage drop switching output DC	[V]	2.5
Permanent current rating of switching output DC	[mA]	200
Switching frequency DC	[Hz]	1000
Short-circuit protection		yes
Overload protection		yes
Detection zone		
Range	[mm]	10...400; (white paper 200 x 200 mm 90% remission)
Setting range	[mm]	70...400
Range adjustable		yes
Max. light spot diameter	[mm]	25
Light spot dimensions refer to		at maximum range

OGT100

Diffuse reflection sensor

OGT-HPKG/US

Operating conditions			
Ambient temperature	[°C]	-25...60	
Protection		IP 65; (in conjunction with a corresponding connector)	
Tests / approvals			
EMC		EN 60947-5-2	
MTTF	[years]	901	
Mechanical data			
Weight	[g]	14.8	
Housing		threaded type	
Dimensions	[mm]	M18 x 1 / L = 44	
Thread designation		M18 x 1	
Materials		housing: ABS	
Lens material		PMMA	
Displays / operating elements			
Display		switching status	1 x LED, yellow
Operating elements			potentiometer
Accessories			
Items supplied		lock nuts: 2	
Remarks			
Pack quantity		1 pcs.	
Electrical connection			

Connector: 1 x M12; coding: A



Connection

