PART NUMBER	DIMENSION "A"	DIMENSION "B"	DIMENSION "C"
700110	.016	.470	.560
700110-1	.062	.470	.560
700110-2	.016	.625	.705
700110-3	.032	.885 (1)	1.000 (1) (F)



SCALE 1:1

700110			
REV	OCN #	DATE	APR
A	004381	09 SEP 81	JH
B	009741	23 AUG 01	RAS
C	022516	28 MAY 04	AH
D	022843	16 JUL 04	REO
E	025450	23 DEC 04	REO
F	025658	12 JAN 05	REO

NOTES:

(1) DIMENSION "B" & DIMENSION "C" TO BE CONCENTRIC TO WITHIN .010 (F)

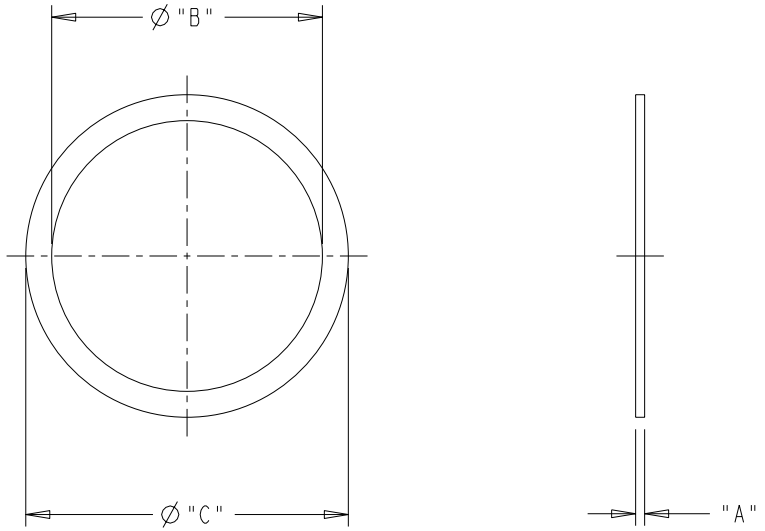

MANUFACTURING SPC

PROCESS:	MATERIAL:	OTTO CONTROLS	DESCRIPTION
. . . .	80 DUROMETER SHORE A NEOPRENE . .	DIVISION OF OTTO ENGINEERING INC. CARPENTERSVILLE, ILLINOIS USA	P7, WASHER-SEAL

UNLESS OTHERWISE SPECIFIED: DIMENSIONS ARE IN INCHES. TOLERANCES ARE AS LISTED. MUST BE FREE FROM BURRS AND SHARP EDGES.

TOLERANCES
.XX ±.01
.XXX ±.005
ANGLES ±1°
SURFACES 64 MICROINCH
DO NOT SCALE DRAWING.

THIS DOCUMENT IS THE CONFIDENTIAL PROPERTY OF OTTO ENGINEERING, INC.. IT IS NOT TO BE USED IN ANY WAY DETRIMENTAL TO THE INTERESTS OF OTTO ENGINEERING, INC..

DRWN. KS	SIZE	FSCM NO	DRAWING NO.	REV.
CHKD. KS	A	21649	700110	F
APPD. RTK				
WT.		THIRD ANGLE PROJECTION	Scale N/A	Sheet 1 OF 1