

SKF TMMP

Standard Jaw Pullers

Instructions for use

Safety recommendations

- The equipment should only be operated by trained personnel.
- Always follow the operating instructions.
- Check the puller and all accessories carefully before use.
  Never use even slightly damaged components.
- Make sure the force rating of the puller (F) exceeds calculated maximum withdrawal force.
- Do not exceed the maximum torque (T) when applying force on a mechanical spindle.
- Always prevent the workpiece/tool from being projected upon sudden release of pressure (e.g. by use of retaining nut).
- Ensure that the puller legs are properly secured around the workpiece.
  Each claw must be fully engaged.
- Make sure the force is equally distributed in all arms.
- Never use the equipment above the stated maximum force.
- Use protective goggles.
- Cover the work with a protective blanket or shield while force being applied.
- Never modify the unit.
- Use original parts only.
- In case of any uncertainties with regards to the use of the puller, contact SKF.

1. Definition of claw dimensions

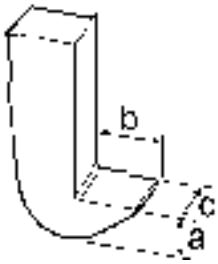

A	Claw height
B	Claw length
C	Claw width

2. Definition of parts and dimensions

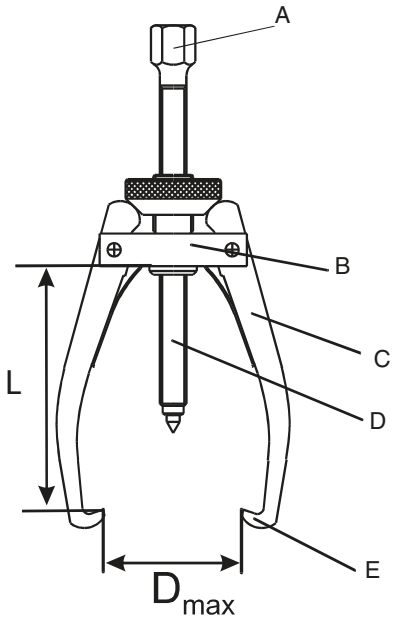

A	Spindle hexagon head	**D**	Spindle
B	Beam	**E**	Claw
C	Arm	**L**	Effective arm length

3. Application

Developed to cover the most common withdrawal applications, the TMMP series is a range of five extractors with a maximum nominal span width from 65 mm (2.6 in) for the smallest (TMMP 2×65), to 300 mm (11.8 in) for the largest (TMMP 3×300).
They are suitable for extracting small to medium sized bearings and other components.

4. Description

The TMMP extractors are made of hardened high quality steel and are oil blackened. They are easy-to-use, as the span width is quickly adjusted by screwing or unscrewing the cone. Strong springs ensure that the arms are held apart and remain in the adjusted position. The two smallest pullers (TMMP 2×65 and TMMP 2×170) are two-armed, while the heavier pullers have three arms. The advantages of a three-armed puller include easier centering and better distribution of the larger withdrawal forces.

5. Technical data

Designation	No. of arms	Width of grip	Effective arm length (L)	Maximum withdrawal force (F)	Maximum torque (T)
		mm (in)	mm (in)	kN (lbf)	Nm (lbf ft)
TMMP 2×65	2	15-65 (0.6-2.6)	60 (2.4)	6 (1.340)	10 (7)
TMMP 2×170	2	25-170 (1.0-6.7)	135 (5.3)	18 (4.030)	40 (30)
TMMP 3×185	3	40-185 (1.6-7.3)	135 (5.3)	24 (5.380)	55 (40)
TMMP 3×230	3	40-230 (1.6-9.1)	210 (8.3)	34 (7.610)	90 (65)
TMMP 3×300	3	45-300 (1.8-11.8)	240 (9.4)	50 (11.200)	160 (115)

Designation	Claw height (A)	Claw height (B)	Claw height (C)	Spindle hexagonal head (AF)	Weight
	mm (in)	mm (in)	mm (in)	mm	kg (lb)
TMMP 2×65	8 (0.31)	7 (0.28)	10 (0.39)	--	0,4 (0.9)
TMMP 2×170	9 (0.35)	12 (0.47)	21 (0.83)	19	1,9 (4.2)
TMMP 3×185	9 (0.35)	12 (0.47)	21 (0.83)	19	2,5 (5.5)
TMMP 3×230	9 (0.35)	13 (0.51)	24 (0.94)	21	5,5 (12.1)
TMMP 3×300	11 (0.43)	14 (0.55)	27 (1.06)	24	9,0 (19.8)

6. Spare parts

TMMP...-6	Spindle with centre nib (not available for TMMP 2×65)

SKF Maintenance Products

® SKF is a registered trademark of the SKF Group.
© SKF Group 2014/03

www.mapro.skf.com
www.skf.com/mount

MP550EN

The contents of this publication are the copyright of the publisher and may not be reproduced (even extracts) unless prior written permission is granted. Every care has been taken to ensure the accuracy of the information contained in this publication but no liability can be accepted for any loss or damage whether direct, indirect or consequential arising out of the use of the information contained herein.