KD501A

Capacitive sensor

KDE3060-FPKG/NI/3D

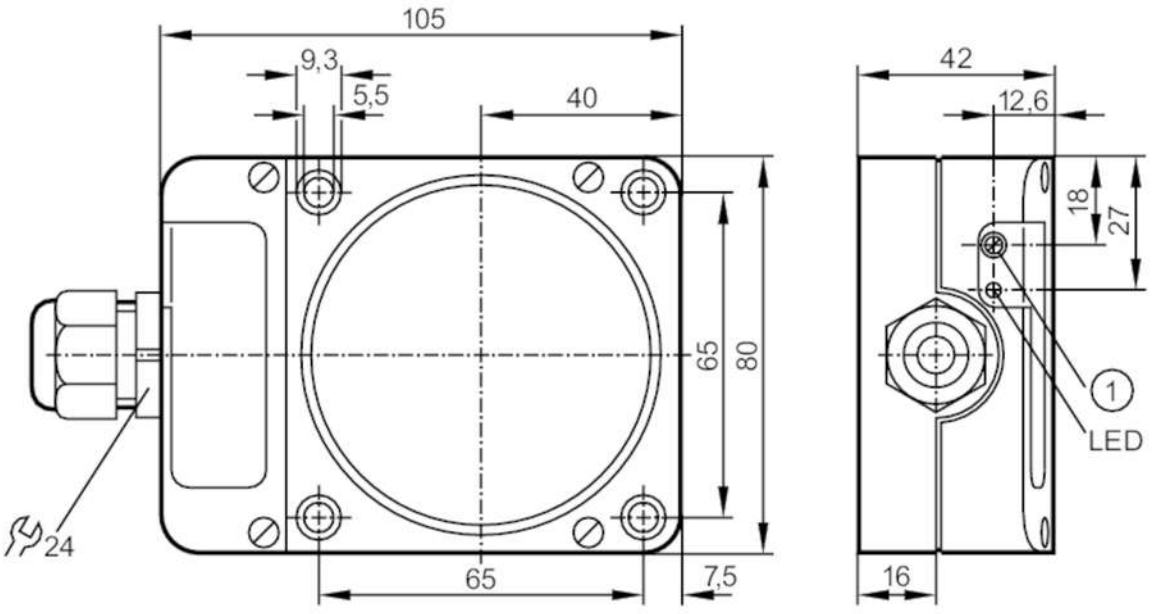

1 potentiometer

Product characteristics		
Electrical design		PNP
Output function		normally open / normally closed; (selectable)
Sensing range	[mm]	60
Housing		rectangular
Dimensions	[mm]	105 x 80 x 42
Electrical data		
Operating voltage	[V]	10...36 DC
Current consumption	[mA]	< 15
Protection class		III
Reverse polarity protection		yes
Measuring principle		capacitive
Outputs		
Electrical design		PNP
Output function		normally open / normally closed; (selectable)
Max. voltage drop switching output DC	[V]	2.5
Permanent current rating of switching output DC	[mA]	200
Switching frequency DC	[Hz]	10
Short-circuit proof		yes
Overload protection		yes
Detection zone		
Sensing range	[mm]	60

KD501A

Capacitive sensor

KDE3060-FPKG/NI/3D

Sensing range adjustable		yes	
Factory setting sensing range	[mm]	60	
Real sensing range Sr	[mm]	60 ± 10 %	
Accuracy / deviations			
Correction factor		glass: 0.4 / water: 1 / ceramics: 0.2 / PVC: 0.2	
Hysteresis	[% of Sr]	1...15	
Switch point drift	[% of Sr]	-15...15	
Operating conditions			
Ambient temperature	[°C]	-20...60	
Protection		IP 65	
Increased immunity		yes	
Tests / approvals			
ATEX marking		II 3D Ex tc IIIC T90°C Dc X IP65	
EMC		EN 60947-5-2	
MTTF	[years]	537	
Mechanical data			
Weight	[g]	279.5	
Housing		rectangular	
Mounting		non-flush mountable	
Dimensions	[mm]	105 x 80 x 42	
Materials		PPE modified; PA	
Tightening torque	[Nm]	housing screws: 0,9 Nm; screws: 4 Nm	
Displays / operating elements			
Display		switching status	1 x LED, yellow
Remarks			
Pack quantity		1 pcs.	

Electrical connection

terminals: 0.34...2.5 mm²; Cable sheath: Ø 5...9 mm; Cable gland: M20 X 1.5

Connection

