580 series

Product overview

- Snap-fit body for panel thicknesses 0.5-3.5mm, panel cut-out 9mm diameter
- Stripped 6mm wire termination 155mm long, PVC
- Polycarbonate lens and body
- Maximum working temperature 105°C
- Red, green, amber, colour options as standard
- Custom wire lengths and specification to order

580 series



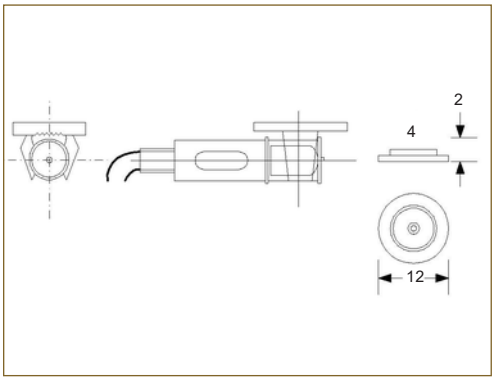

PART NO.	IND580	X	XX-	XXX-	T/	XXX
580 series indicator	580					
Lens type	4					
Stripped wire 200mm long	05					
Neon 240V 0.8mA, red wire	240					
Transparent lens	T					
Lens colour: red	RED					
Lens colour: green	GRN					
Lens colour: amber	AMB					

E.g. IND580405-240-T/GRN - stripped wire, 240V, green

+44 (0)1638 716101 | sales@camdenboss.com | www.camdenboss.com

We operate a constant improvement policy, our products are subject to change without notice.

Vers 2

bsi. ISO 9001 Quality Management FM 28614 ISO 14001 Environmental Management EMS 613558