NOTES
MATERIAL: -DIECAST ALUMINUM ALLOY. -FOUR 6-32 Phillips Screws

VIEW OF BOX (LID REMOVED)

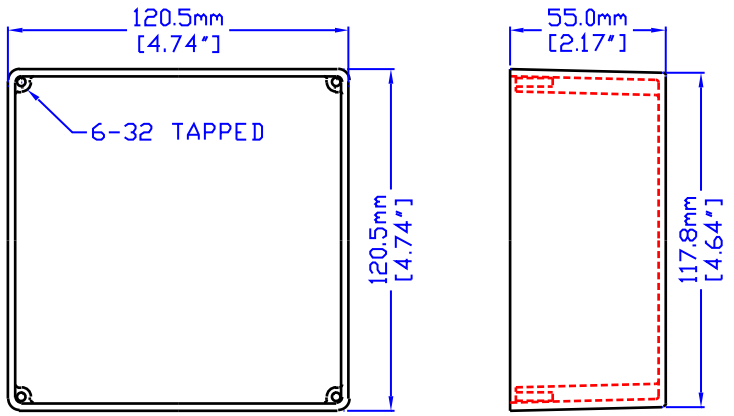

NOTE:
FOR DETAIL DIMENSIONING
REFER TO DRAWING
1590U

VIEW INSIDE LID

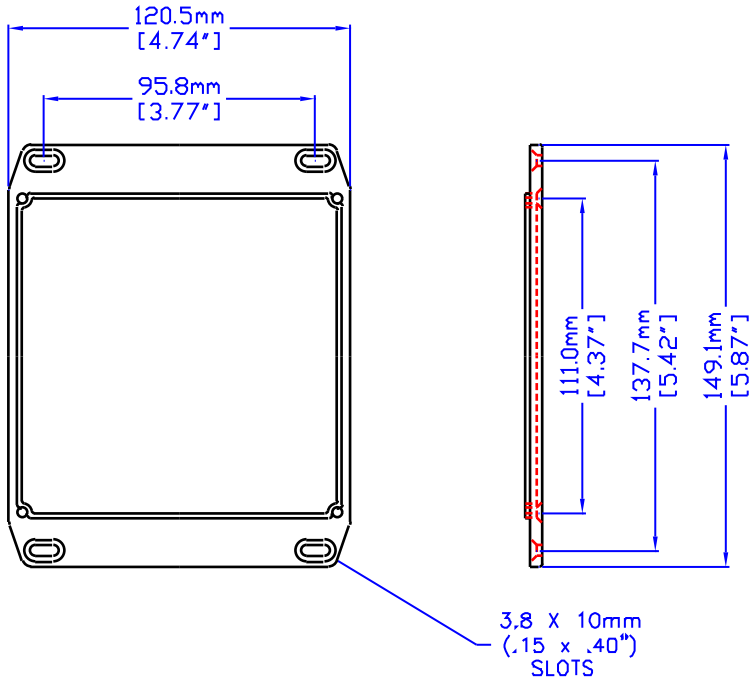

1590UFL

1590U WITH SPECIAL FLANGED LID.
AVAILABLE FROM STOCK.

WATERPROOFING KIT IS AVAILABLE
PART # 1590UG.
THE GASKET KIT WILL AFFORD PROTECTION
AGAINST LIQUID TO NEMA 4 AND IP65 LEVELS.

THIS ENCLOSURE IS ALSO AVAILABLE IN BLACK
AND GRAY TEXTURE FINISH.

HAMMOND MANUFACTURING

1590UFL

CANADA - PH (519) 886 7170 - FAX (519) 886 8311
U.S.A. - PH (716) 631 5700 - FAX (716) 631 1156