Monitoring relays - GAMMA series

G4PM...SYL20

- Voltage monitoring in 3-phase mains for 500V resp. 690V
- Multifunction, fault latch
- Monitoring of phase sequence and phase failure
- Monitoring of asymmetry selectable
- Connection of neutral wire optional
- Detection of loss of neutral wire
- Supply voltage selectable via power modules
- 2 change-over contacts
- Width 45 mm
- Industrial design



Technical data

1. Functions

Voltage monitoring in 3-phase mains with adjustable thresholdes, adjustable tripping delay, monitoring of phase sequence and phase failure, monitoring of asymmetry with adjustable threshold and the following functions which are selectable by means of rotary switch:

UNDER	Undervoltage monitoring
UNDER+SEQ	Undervoltage monitoring and monitoring of phase sequence
WIN	Monitoring the window between min and max
WIN+SEQ	Monitoring the window between min and max and monitoring of phase sequence
UNDER+Latch	Undervoltage monitoring with fault latch
UNDER+SEQ+Latch	Undervoltage monitoring and monitoring of phase sequence with fault latch
WIN+Latch	WIN with fault latch
WIN+SEQ+Latch	Monitoring the window between min and max and monitoring of phase sequence with fault latch

2. Time ranges

	Adjustment range	
Start-up suppression time:	-	
Tripping delay:	0.1s	10s

3. Indicators

Red LED Asym ON:	indication asymmetry failure
Ree LED max/min ON/OFF:	indication of failure of the corresponding threshold
Red LED max/min flashes:	indication of tripping delay of the corresponding threshold
Red LED SEQ ON:	indication phase sequence failure
Yellow LED ON/OFF:	indication of relay output

4. Mechanical design

Self-extinguishing plastic housing, IP rating IP40
Mounting on DIN-Rail TS 35 according to EN 60715
Mounted position: any
Shockproof terminal connection according to VBG 4 (PZ1 required), IP rating IP20
Tightening torque: max. 1Nm
Terminal capacity:
- 1 x 0.5 to 2.5mm² with/without multicore cable end
- 1 x 4mm² without multicore cable end
- 2 x 0.5 to 1.5mm² with/without multicore cable end
- 2 x 2.5mm² flexible without multicore cable end

5. Input circuit

Supply voltage:

12 to 500V AC	terminals A1-A2 (galvanically seperated) selectable via power modulesTR3
Tolerance:	according to specification of power module
Rated frequency:	according to specification of power module
Rated consumption:	4VA (3W)
Duration of operation:	100%
Reset time:	500ms
Residual ripple for DC:	-
Drop-out voltage:	>30% of the supply voltage
Overvoltage category:	III (in accordance with IEC 60664-1)
Rated surge voltage:	6kV

6. Output circuit

2 potential free change-over contacts

Rated voltage:	250V AC
Switching capacity:	1250VA (5A/250V AC)
Fusing:	5A fast acting
Mechanical life:	20 x 10^6 operations
Electrical life:	2 x 10^5 operations at 1000VA resistive load
Switching frequency:	max. 60/min at 100VA resistive load max. 6/min at 1000VA resistive load (in accordance with IEC 60947-5-1)
Overvoltage category:	III (in accordance with IEC 60664-1)
Rated surge voltage:	6kV

7. Measuring circuit

Fusing:	max. 20A (in accordance with UL 508)	
Measured variable:	AC Sinus (48 to 63Hz)	
Measured input:		
3 ~ 500V	terminals (N)-L1-L2-L3	(G4PM500VSYL20)
3(N)~ 690/400V	terminals (N)-L1-L2-L3	(G4PM690VSYL20)
Overload capacity:		
3(N)~ 500V	3(N)~ 700V	(G4PM500VSYL20)
3(N)~ 690/400V	3(N)~ 950/550V	(G4PM690VSYL20)
Input resistance:		
3~ 500V	1MΩ	(G4PM500VSYL20)
3(N)~ 690/400V	1MΩ	(G4PM690VSYL20)
Switching threshold		
Max:	-20% to +30% of U_N	
Min:	-30% to +20% of U_N	
Asymmetry:	5% to 25%	
Overvoltage category:	III (in accordance with IEC 60664-1)	
Rated surge voltage:	6kV	

8. Accurary

Base accurary:	±5% of maximum scale value
Frequency response:	-
Adjustment accurary:	≤5% of maximum scale value
Repetition accurary:	≤2%
Voltage influence:	≤0.5%
Temperature influence:	≤0.1% / °C

9. Ambient conditions

Ambient temperature:	-25 to +55°C (in accordance with IEC 60068-1) -25 to +40°C (in accordance with UL 508)
Storage temperature:	-25 to +70°C
Transport temperature:	-25 to +70°C
Relative humidity:	15% to 85% (in accordance with IEC 60721-3-3 class 3K3)
Pollution degree:	3 (in accordance with IEC 60664-1)
Vibration resistance:	10 bis 55Hz 0.35mm (in accordance with IEC 60068-2-6)
Shock resistance:	15g 11ms (in accordance with IEC 60068-2-27)

Subject to alterations and errors

Functions

For all the functions the LEDs Min and Max are flashing alternating, when the minimum value for the measured voltage was chosen to be greater than the maximum value.
If a failure already exists when the device is activated, the output relay remains in off-position and the LED for the corresponding threshold is illuminated.

Under voltage monitoring (UNDER, UNDER+SEQ)
When the measured voltage (mean value of phase-to-phase voltages) falls below the value adjusted at the MIN-regulator, the set interval of the tripping delay (DELAY) begins (red LED MIN flashes). After the interval has expired (red LED MIN illuminated), the output relay switches into off-position (yellow LED not illuminated), the output relay again switches into on-position (yellow LED illuminated), when the measured voltage exceeds the value adjusted at the MAX-regulator.

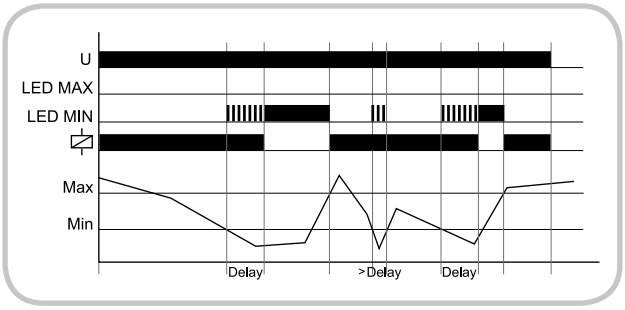

Windowfunction (WIN, WIN+SEQ)
The output relay switches into on-position (yellow LED illuminated) when the measured voltage (mean value of phase-to-phase voltages) exceeds the value adjusted at the MIN-regulator. When the measured voltage exceeds the value adjusted at the MAX-regulator, the set interval of the tripping delay (DELAY) begins (red LED MAX flashes). After the interval has expired (red LED MAX illuminated) the output relay switches into off-position (yellow LED not illuminated). The output relay again switches into on-position (yellow LED illuminated) when the measured voltage falls below the value adjusted at the MAX-regulator (red LED MAX not illuminated). When the measured voltage falls below the value adjusted at the MIN-regulator, the set interval of tripping delay (DELAY) begins again (red LED MIN flashes). After the interval has expired (red LED MIN illuminated), the output relay switches into off-position (yellow LED not illuminated).

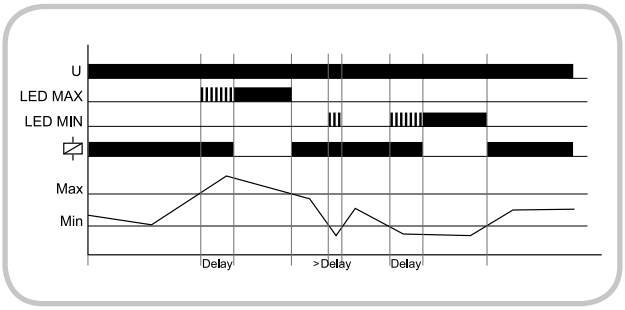

Phase sequence monitoring (SEQ)
Phase sequence monitoring is selectable for all functions.
If a change in phase sequence ist detected (red LED SEQ illuminated), the output relay switches into off-position immetiately (yellow LED not illuminated).

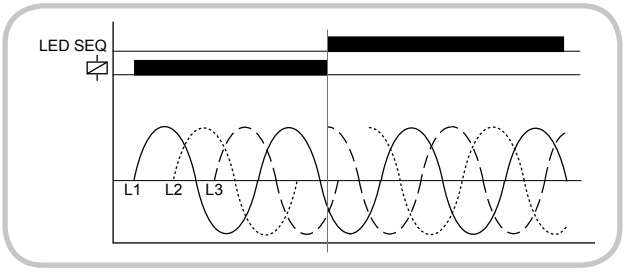

Phase failure monitoring (SEQ)
If one of the phase voltages fails, the set interval of the tripping delay (DELAY) begins (red LED SEQ flashes). After the interval has expired (red LED SEQ illuminated), the output relay switches into off-position (yellow LED not illuminated).
Reverse voltages of a consumer (e.g. a motor which conitnues to run on two phases only) do not effect the disconnection but can be monitoring by using a proper value for the asymmetry.

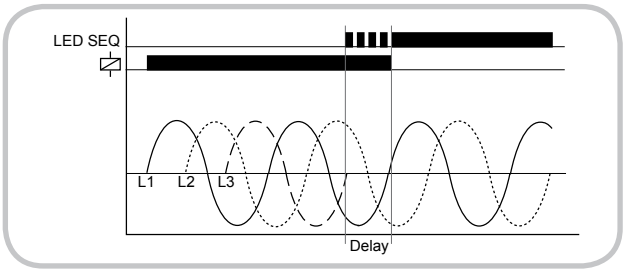

Asymmetry monitoring
If the asymmetry of the phase-to-phase voltages exceeds the value set at the ASYM-regulator, the set interval of the tripping delay (DELAY) begins (red LED ASYM flashes). After the interval has expired (red LED ASYM illuminated), the output relay switches into off-position (yellow LED not illuminated).
If the neutral wire is connected to the device, the asymmetry of the phase voltages referred to the neutral wire (Y-voltage) is monitored also. In that case both values of the asymmetry are evaluated and if one of the values exceeds the value set at the ASYM-regulator, the set interval of the tripping delay (DELAY) begins (red LED ASYM flashes). After the interval has expired (red LED ASYM illuminated), the output relay switches into off-position (yellow LED not illuminated).

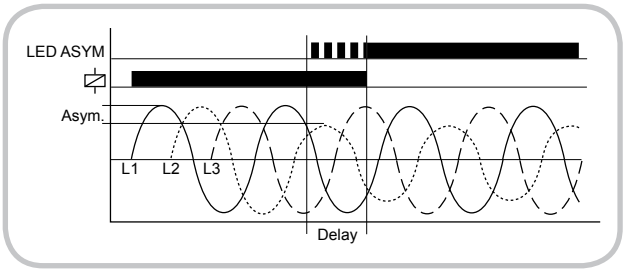

Loss of neutral wire by means of evaluation of asymmetry
A break of the neutral wire between power line and machinery is detected as soon as asymmetry between phase-to-phase voltage and neutral wire occurs. If the asymmetry exceeds the value set at the ASYM-regulator, the set interval of the tripping delay (DELAY) begins (red LED ASYM flashes). After the interval has expired (red LED ASYM illuminated). A break of the neutral wire between our device and the machinery can not be detected.

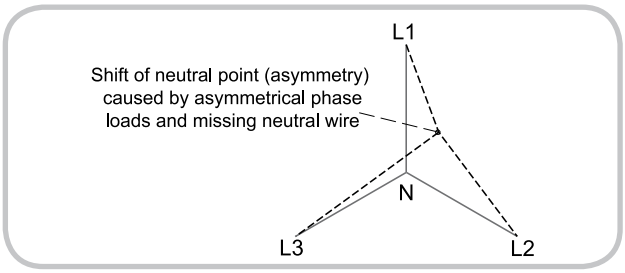

Fault latch
The functions UNDER+L, UNDER+SEQ+L, WIN+L and WIN+SEQ+L include a fault latch. The fault latch is active for all monitoring functions UNDER or WIN, asymmetry and phase sequence. Faults will be stored if the tripping delay has expired and the fault is effective on the output relay.
The fault latch keeps the output in off-position after a fault and freezes the LEDs for fault indication.
Saved faults may be reset by interruption the supply voltage.

Subject to alterations and errors

Connections

G4PM690VSYL20 mit Powermodul 24V AC

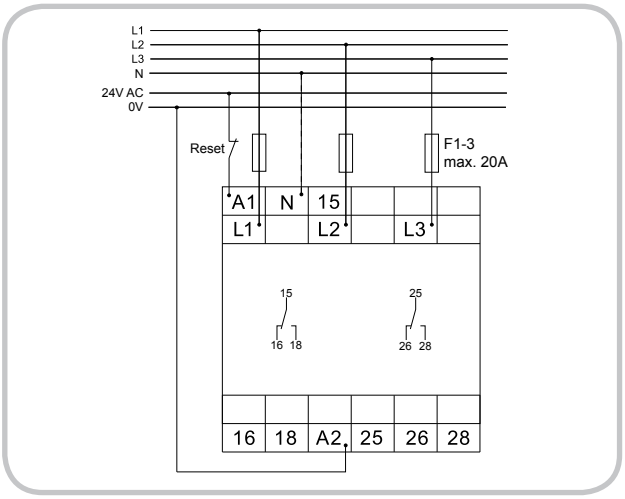

G4PM690VSYL20 mit Powermodul 400V AC

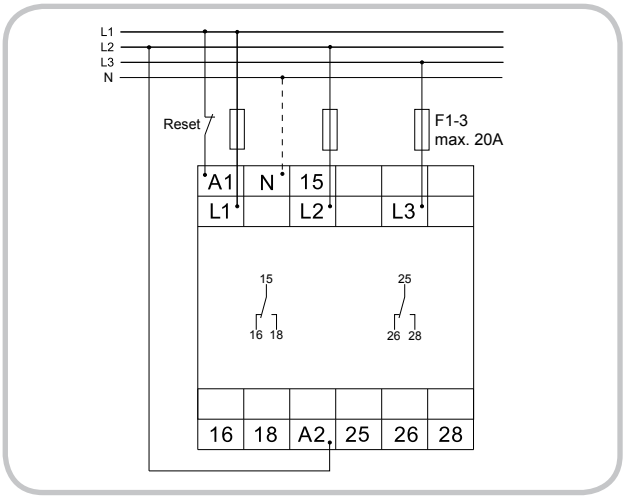

G4PM500VSYL20 mit Powermodul 500V AC

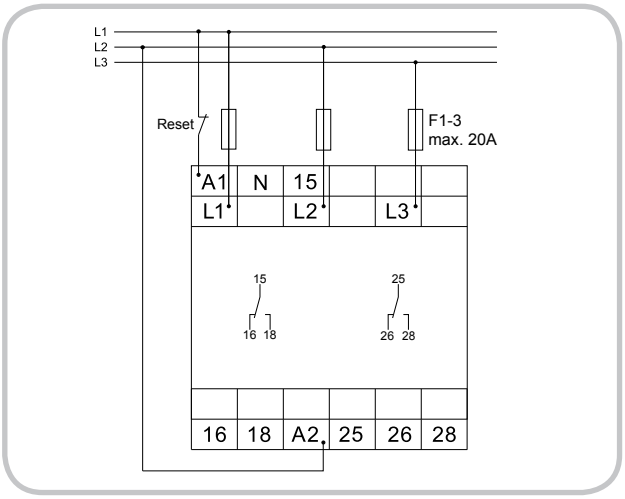

Abmessungen

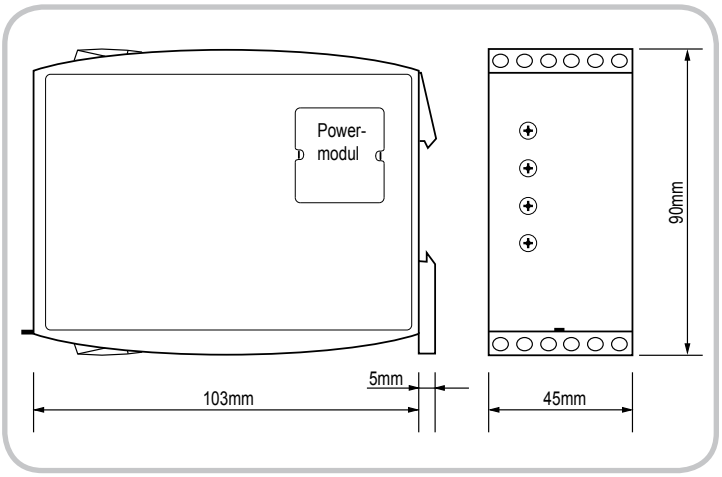

Subject to alterations and errors

Notes

Subject to alterations and errors