SCHAEFFLER

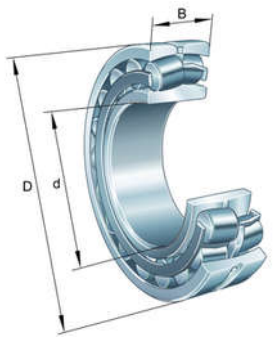

FAG

X-life

22218-E1-XL-C3

Spherical roller bearing

Schaeffler ID:
0190004130030

Spherical roller bearings 222..-E1, main dimensions to DIN 635-2

Technical information

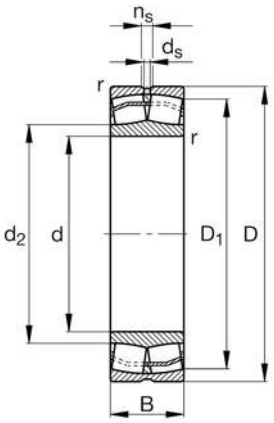

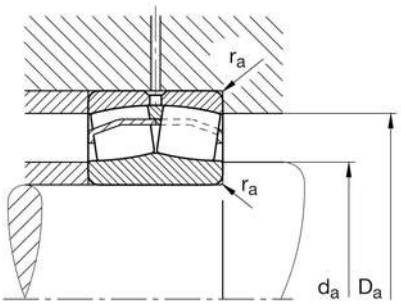

Main Dimensions & Performance Data

d	90 mm	Bore diameter
D	160 mm	Outside diameter
B	40 mm	Width
C_r	345,000 N	Basic dynamic load rating, radial
C_{0r}	375,000 N	Basic static load rating, radial
C_{ur}	43,500 N	Fatigue load limit, radial
n_G	5,200 1/min	Limiting speed
$n_{\vartheta r}$	3,400 1/min	Reference speed
	3.36 kg	Weight

Mounting dimensions

$d_{a\ min}$	101 mm	Minimum diameter shaft shoulder
$D_{a\ max}$	149 mm	Maximum diameter of housing shoulder
$r_{a\ max}$	2 mm	Maximum recess radius

Dimensions

r_{min}	2 mm	Minimum chamfer dimension
D_1	143.9 mm	Bore diameter outer ring
d_2	106.1 mm	Raceway diameter of the inner ring
d_s	3.2 mm	Diameter lubrication hole
n_s	6.5 mm	Width of lubricating groove

Temperature range

T_{min}	-30 °C	Operating temperature min.
T_{max}	200 °C	Operating temperature max.

The datasheet is only an overview of dimensions and basic load ratings of the selected product. Please always observe all further information and guidelines for this product. For further information you can use the contact form on our website.

SCHAEFFLER

Calculation factors		
e	0.23	Limiting value of Fa/Fr for the applicability of diff. Values of factors X and Y
Y_1	2.9	Dynamic axial load factor
Y_2	4.31	Dynamic axial load factor
Y_0	2.83	Static axial load factor

The datasheet is only an overview of dimensions and basic load ratings of the selected product. Please always observe all further information and guidelines for this product. For further information you can use the contact form on our website.