INSTALLATION INSTRUCTION

Adapter handle

OH_S7, OH_S8

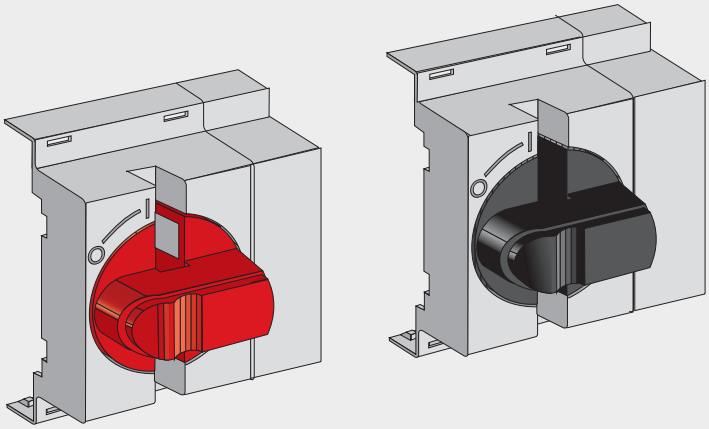

OH_S7

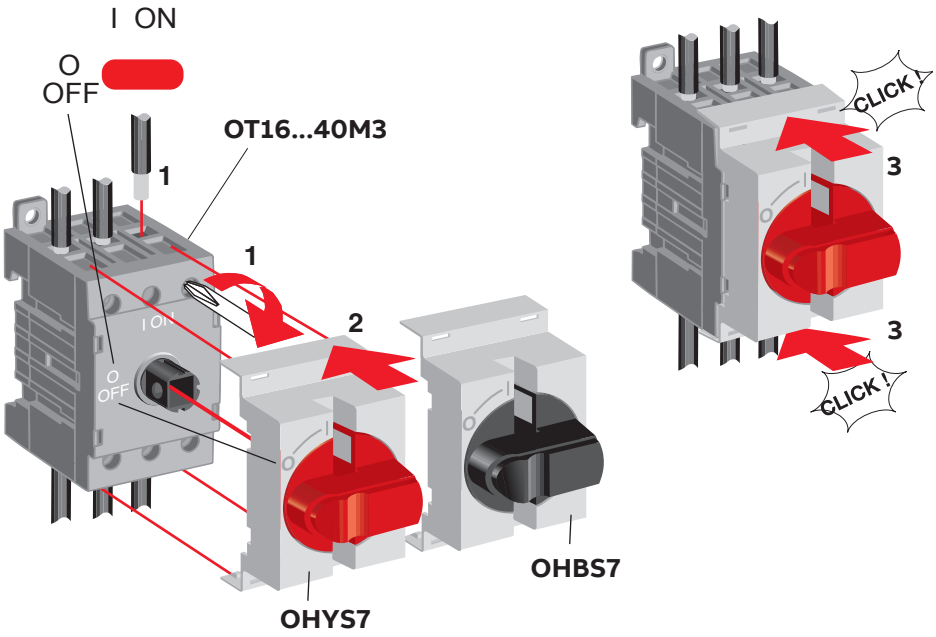

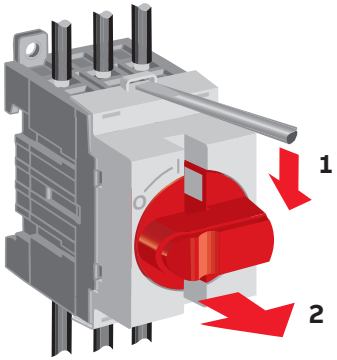

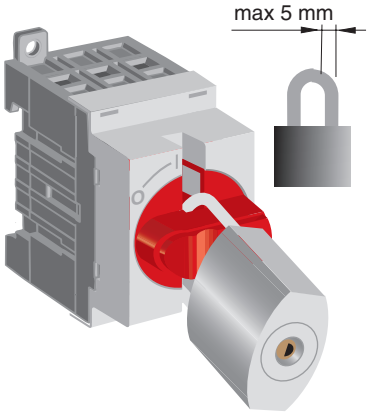

OH_S8

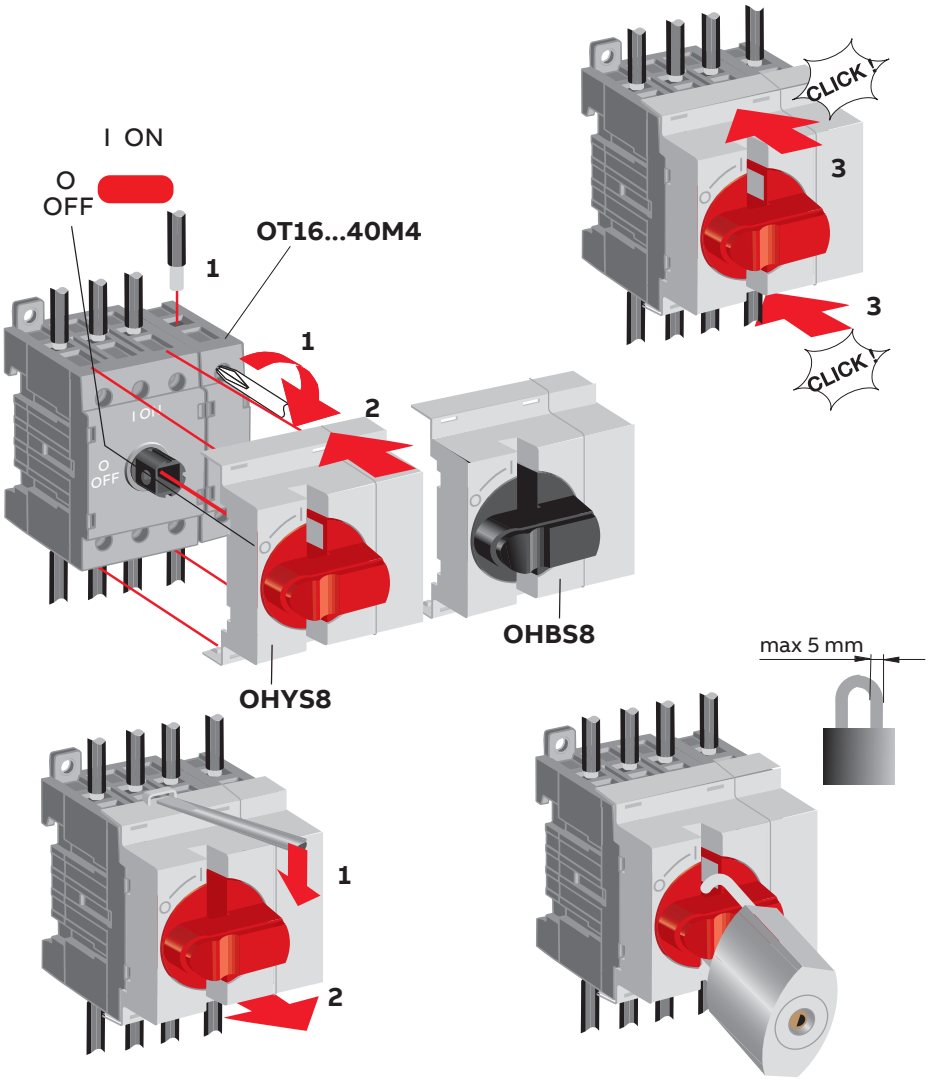

Contact us

ABB Oy
P.O. Box 622
FI-65101 Vaasa
Finland

abb.com/lowvoltage

© Copyright 2022 ABB. All rights reserved.
Specifications subject to change without notice.

34 OHYS7-8 rev. G/ 1SCC390147M0201 # 17.1.2022