# O8H217

## Diffuse reflection sensor with background suppression

O8H-HNKG/0,30M/AS/4P

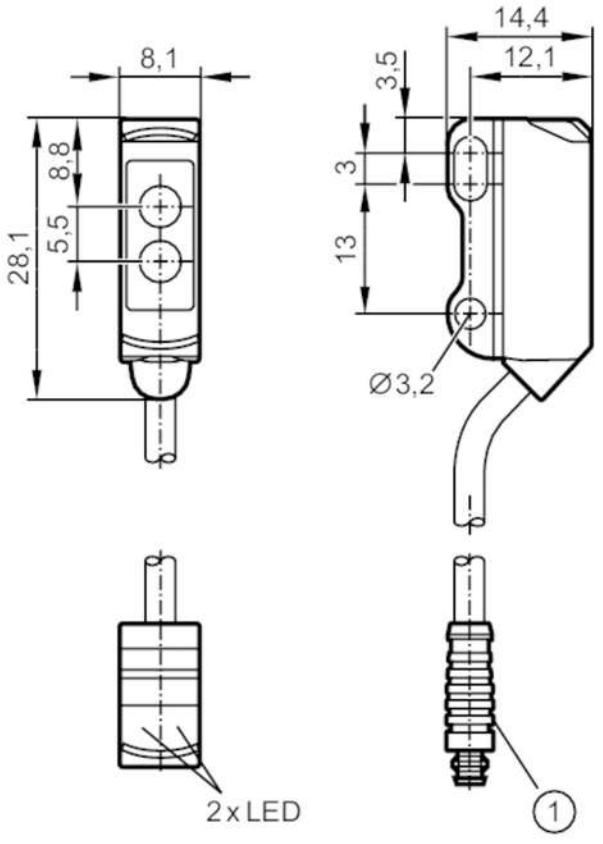


1: illustration (example)
receiver in upper lens
transmitter in lower lens

| | | |
|---|---|---|
| **Product characteristics** | | |
| Type of light | | red light |
| Housing | | rectangular |
| **Application** | | |
| Special feature | | Background suppression |
| Function principle | | Diffuse reflection sensor |
| **Electrical data** | | |
| Operating voltage | [V] | 10...30 DC |
| Current consumption | [mA] | 20;  ((24 V)) |
| Protection class | | III |
| Reverse polarity protection | | yes |
| Type of light | | red light |
| Wave length | [nm] | 633 |
| **Outputs** | | |
| Electrical design | | NPN |
| Output function | | light-on mode |

# O8H217

## Diffuse reflection sensor with background suppression

O8H-HNKG/0,30M/AS/4P

| | | | |
|---|---|---|---|
| Max. voltage drop switching output DC | [V] | 2.5 | |
| Permanent current rating of switching output DC | [mA] | 100 | |
| Switching frequency DC | [Hz] | 1000 | |
| Short-circuit protection | | yes | |
| Type of short-circuit protection | | pulsed | |
| **Detection zone** | | | |
| Range | [mm] | 1...50;  (white paper 200 x 200 mm) | |
| Range on white object (90 % remission) | [mm] | 1...50 | |
| Range on grey object (18 % remission) | [mm] | 3...50 | |
| Range on black object (6 % remission) | [mm] | 5...50 | |
| Range adjustable | | no | |
| Max. light spot diameter | [mm] | 4 | |
| Light spot dimensions refer to | | at maximum range | |
| Background suppression available | | yes | |
| **Operating conditions** | | | |
| Ambient temperature | [°C] | -25...60 | |
| Protection | | IP 65; IP 67 | |
| **Tests / approvals** | | | |
| EMC | | EN 60947-5-2 | |
| MTTF | [years] | 757 | |
| UL approval | | Ta | -25...60 °C |
| | | Enclosure type | Type 1 |
| | | power supply | Limited Voltage/Current |
| | | UL Approval no. | E015 |
| | | File number UL | E174191 |
| **Mechanical data** | | | |
| Weight | [g] | 20.9 | |
| Housing | | rectangular | |
| Dimensions | [mm] | 28.1 x 8.1 x 14.4 | |
| Materials | | housing: ABS; stainless steel (316L/1.4404) | |
| Lens material | | PMMA | |
| Lens alignment | | side lens | |
| **Displays / operating elements** | | | |
| Display | | switching status | 1 x LED, yellow |
| | | operation | 1 x LED, green |
| **Remarks** | | | |
| Pack quantity | | 1 pcs. | |

# O8H217

## Diffuse reflection sensor with background suppression

O8H-HNKG/0,30M/AS/4P

## Electrical connection

Cable: 0.3 m, PVC; 3 x 0.08 mm²

Connector: 1 x M8; coding: A




### Connection

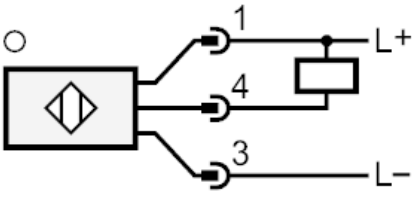


## Diagrams and graphs

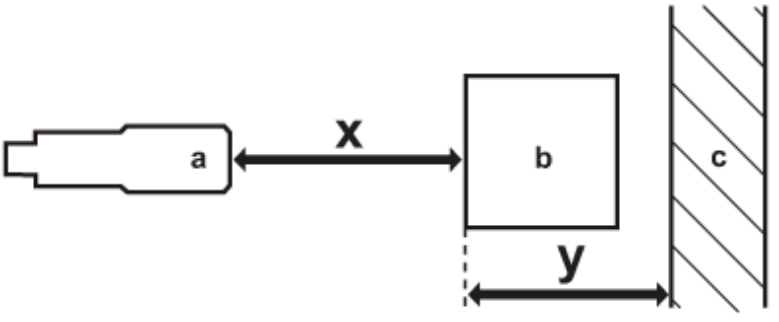


a: sensor

b: object

c: background

x: distance sensor/object [mm]

y: min. distance object/background [mm]

# O8H217

## Diffuse reflection sensor with background suppression

**O8H-HNKG/0,30M/AS/4P**

accuracy graph

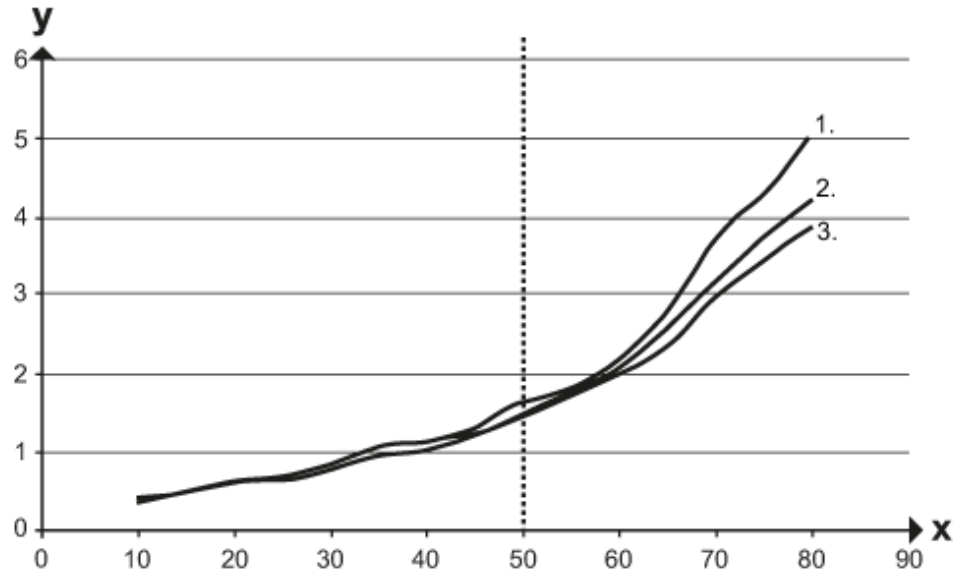


x: distance sensor/object [mm]

y: min. distance object/background [mm]

1 = object black (6 % remission) , background white (90 % remission)

2 = object grey (18 % remission) , background white (90 % remission)

3 = object white (90 % remission) , background white (90 % remission)