E37650

Thermowell for temperature sensors

THERMOWELL, D6/ G1/2 /L=300

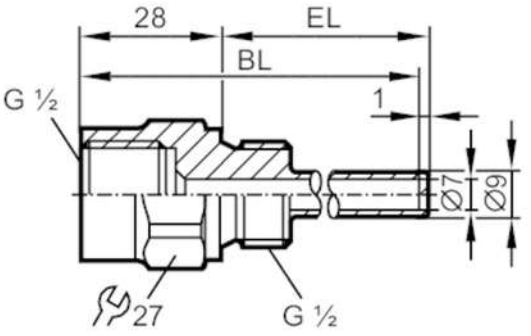

Application		
Design		for temperature sensors EL = 300 mm
Pressure rating	[bar]	100
Note on pressure rating		< 250 °C
Mechanical data		
Weight	[g]	183.55
Materials		stainless steel (1.4571/316Ti)
Sensor connection		G 1/2 Ø 6 mm
Process connection		G 1/2
Installation length EL	[mm]	274
Bore length BL	[mm]	300
Remarks		
Pack quantity		1 pcs.