6,9 gRB-URB DIN German Standard

German Standard
500 - 690V AC
gRB-URB FROM 20 TO 400A
Size: 000

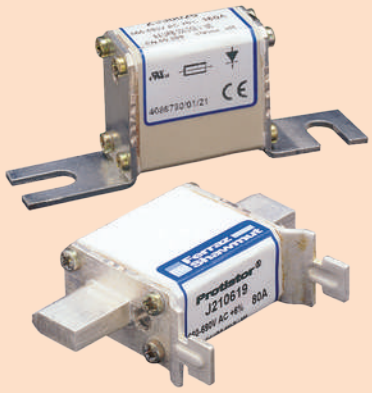

Features/Benefits:

- Extremely high interrupting rating
- Protection of power semiconductors according to IEC 269.1 and EN 60269.4
- 500-690V [Rating 20 to 400A]
- gR class [gRB Ratings 20 to 125A] according to VDE 636-23
  -Full range protection
  -Improved safety and protection
  -Allows selective coordination
- aR class [current rating 80 to 400A] according to VDE 636-23 and IEC 269.4
- 3 models complying with DIN 43653-00C are:
  -With or without blown fuse indication
  -With trip indicator
- Model complying with DIN 43620 (00C)
  -Standard with or without blown fuse indication
  -With trip indicator

c UL us

Applications Data

Voltage Rating U_N(V)	Class	Current Rating I_N(A)	Melting I^2t @ 1 ms (A^2s)	Total Clearing I^2t @ Rated Voltage (A^2s)	Watts Loss 0.8 I_N	Watts Loss I_N	Tested Interrupting Rating	Estimated Interrupting Rating
690	gRB	20	12	80	3.8	7	200 k A @ 660 V	300 k A @ 660 V
		25	20	150	5.0	9		
		32	39	270	5.5	10		
		40	70	460	6.6	12		
		50	102	730	7.7	14		
		63	210	1500	8.8	16		
		80	475	2900	9.9	18		
		100	970	6000	11	20		
		125	1900	11800	11.6	21		
690	URB	80	390	2500	11.6	21		
		100	690	4200	12.7	23		
		125	1300	8900	14.3	26		
		160	2700	16000	17.0	31		
		200	5250	31500	19.8	36		
		250	9900	52000	24.8	45		
660		315	15500	82000	31.9	58	120 k A @ 500 V	
500		350	22400	110000	31.9	58		
		400	33200	160000	36.3	66		

Minimum operating voltage for blown fuse indicator: 20 V

6,9 gRB-URB DIN German Standard

German Standard Blade-Type DIN 43620**

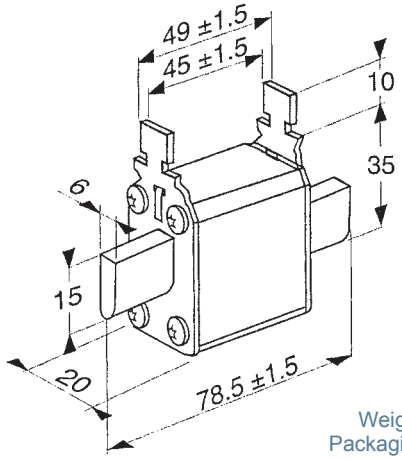

Weight: 150 g
Packaging: 3 pieces

Microswitches
MS 4L 2-5 B6 + PRES Ref. F210156
MS 4L 2-5 B2 + PRES Ref. G210157

* Fuse Base: 41002-G

Size	Description	Cat. No.	CI/I_N
16	6,9 GRB 000 PV 016	Y210609	1
20	6,9 GRB 000 PV 020	Z210610	1
25	6,9 GRB 000 PV 025	A210611	1
32	6,9 GRB 000 PV 032	B210612	1
40	6,9 GRB 000 PV 040	C210613	1
50	6,9 GRB 000 PV 050	D210614	1
63	6,9 GRB 000 PV 063	E210615	1
80	6,9 GRB 000 PV 080	F210616	1
100	6,9 GRB 000 PV 100	G210617	1
125	6,9 GRB 000 PV 125	H210618	1
80	6,9 URD 000 PV 0080	Q320059	1
100	6,9 URD 000 PV 0100	V320063	1
125	6,9 URD 000 PV 0125	X320065	0,95
160	6,9 URD 000 PV 0160	B320069	0,85
200	6,9 URD 000 PV 0200	D320071	0,85
250	6,9 URD 000 PV 0250	H320075	0,8
315	6,9 URD 000 PV 0315	M320079	0,7
350	5 URB 000 PV 350	R210626	0,7
400	5 URB 000 PV 400	S210627	0,65

These fuses are not UL recognized.

German Standard without Blown Fuse Indicator

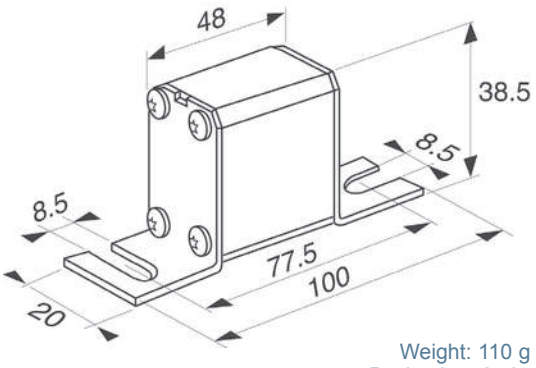

Weight: 110 g
Packaging: 6 pieces

* Fuse Base: SI 000 DIN 80
Ref. Number: C 220710

Size	Description	Cat. No.	CI/I_N
20	6,9 GRB 000 D08 / 020	D330030	1
25	6,9 GRB 000 D08 / 025	E330031	1
32	6,9 GRB 000 D08 / 032	F330032	1
40	6,9 GRB 000 D08 / 040	G330033	1
50	6,9 GRB 000 D08 / 050	H330034	1
63	6,9 GRB 000 D08 / 063	J330035	1
80	6,9 GRB 000 D08 / 080	A330073	1
100	6,9 GRB 000 D08 / 100	S330112	1
125	6,9 GRB 000 D08 / 125	T330113	0,9
80	6,9 URB 000 D08 / 080	K330036	1
100	6,9 URB 000 D08 / 100	L330037	1
125	6,9 URB 000 D08 / 120	M330038	0,9
160	6,9 URB 000 D08 / 160	N330039	0,85
200	6,9 URB 000 D08 / 200	P330040	0,85
250	6,9 URB 000 D08 / 250	Q330041	0,8
315	6,9 URB 000 D08 / 315	R330042	0,7
350	5 URB 000 D08 / 350	V330114	0,7
400	5 URB 000 D08 / 400	D330191	0,65

6,9 gRB-URB DIN German Standard

German Standard with Blown Fuse Indication

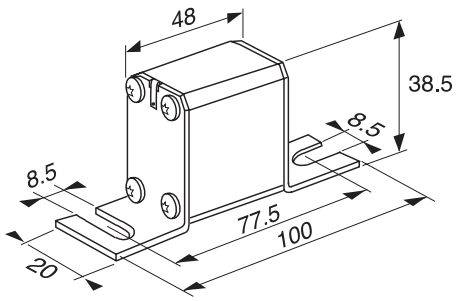

Current Rating	Description	Cat. No.	I/N Fuse Base*
20	6,9 gRB 000 DO8V/020	P330017	1
25	6,9 gRB 000 DO8V/025	Q330018	1
32	6,9 gRB 000 DO8V/032	R330019	1
40	6,9 gRB 000 DO8V/040	S330020	1
50	6,9 gRB 000 DO8V/050	T330021	1
63	6,9 gRB 000 DO8V/063	V330022	1
80	6,9 gRB 000 DO8V/080	G330102	1
100	6,9 gRB 000 DO8V/100	Q330110	1
125	6,9 gRB 000 DO8V/125	R330111	0,9
80	6,9 URB 000 DO8V/080	W330023	1
100	6,9 URB 000 DO8V/100	X330024	1
125	6,9 URB 000 DO8V/125	Y330025	0,95
160	6,9 URB 000 DO8V/160	Z330026	0,85
200	6,9 URB 000 DO8V/200	A330027	0,85
250	6,9 URB 000 DO8V/250	B330028	0,8
315	6,9 URB 000 DO8V/315	C330029	0,7
350	5 URB 000 DO8V/350	W330115	0,7
400	5 URB 000 DO8V/400	E330192	0,65

**Fuse Base: SI 000 DIN 80*
Ref. Number: C 220710

German Standard with Separate Blown Fuse Trip-Indicator

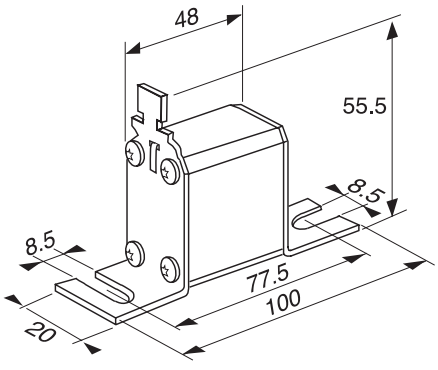

Current Rating	Description	Cat. No.	I/N Fuse Base*
20	6,9 gRB 000 DO8L/020	J330173	1
25	6,9 gRB 000 DO8L/025	K330174	1
32	6,9 gRB 000 DO8L/032	L330175	1
40	6,9 gRB 000 DO8L/040	M330176	1
50	6,9 gRB 000 DO8L/050	N330177	1
63	6,9 gRB 000 DO8L/063	P330178	1
80	6,9 gRB 000 DO8L/080	Q330179	1
100	6,9 gRB 000 DO8L/100	R330180	1
125	6,9 gRB 000 DO8L/125	S330181	0,9
80	6,9 URB 000 DO8L/080	T330182	1
100	6,9 URB 000 DO8L/100	V330183	1
125	6,9 URB 000 DO8L/125	W330184	0,9
160	6,9 URB 000 DO8L/160	X330185	0,85
200	6,9 URB 000 DO8L/200	Y330186	0,85
250	6,9 URB 000 DO8L/250	Z330187	0,8
315	6,9 URB 000 DO8L/315	A330188	0,7
350	5 URB 000 DO8L/350	B330189	0,7
400	5 URB 000 DO8L/400	F330193	0,65

Microswitch
MC 4L 2-5 B6 + PRES Ref. Number: F210156
MC 4L 2-5 B2 + PRES Ref. Number: G210157
**Fuse Base: SI 000 DIN 80 Ref. Number: C220710*