Brand of NTN corporation

Technical data

UCT210CC

Bearing units



Grey cast housing, radial insert ball bearing with socket set screws,seal with slinger

KIT CONTENT

UC210G2, SCC210, SCO210-50, T210N

VISUAL (S)

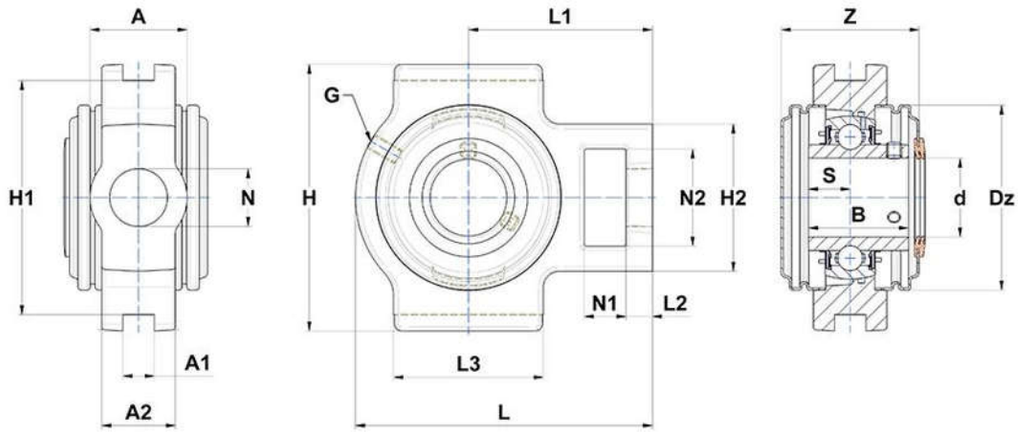

PRODUCT DEFINITION

Brand	SNR
A - Housing width	49 mm
A1 - Width of location slot	16 mm
A2	37 mm
B - Width of Inner Ring	51,6 mm
d - Shaft diameter	50 mm

NTN Europe
1 rue des Usines · BP 2017 · 74010 Annecy Cedex · France · Tel. +33 (0)4 50 65 30 00
S.A. au capital de 322 639 919 € · RCS ANNECY B 325 821 072 · Id. Fiscale : FR 48 325 821 072
SIRET 325 821 072 00015 · Code APE 2815 Z · Code NACE 28.15

PRODUCT DEFINITION	
Dz - Outer diameter of cover	100 mm
G - Grease fitting	M6x1
H - Housing length, width or diameter	117 mm
H1 - Distance between location slots	102 mm
H2 - Housing height / width	83 mm
L - Housing length	149 mm
L1 - Distance attachment end face to bearing centerline	90 mm
L2 - Thickness of attachment end	16 mm
L3 - Length of guidance slot/face	86 mm
N - Mounting hole dimension	29 mm
N1 - Length of attachment slot	19 mm
N2 - Height of attachment slot	49 mm
S - Distance front side/bearing centre	19 mm
Z - Width over covers	74,6 mm

PRODUCT PERFORMANCE	
C - Dynamic load rating	35100000 mN
C0 - Static load rating	23200000 mN
Operating temperature min.	253,15 °K
Operating temperature max.	373,15 °K

OTHER FEATURES	
Mass	2,63 kg
Recommended tightening torque for set screw	22 N-m