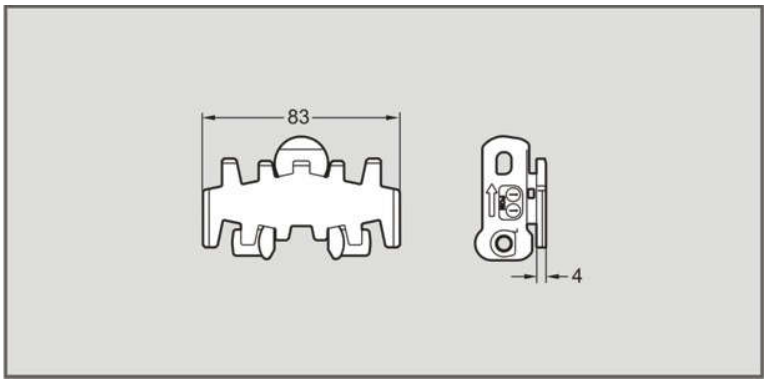

©2022 powered by CADENAS

XBTP 5A85

Name	Plain chain
Description	/
Product Group(s)	X85
Configurable	No
Pack Size	1
Class	A
Weight	5.0
Unit	PCE
Length	5000
Catalogue	
Chain guide	
Spare parts	