Permanent Light 800 / Accessories

Surface housing 3-fold GY



Part No.: 975.815.08

MECHANICAL DATA	
Length	266 mm
Width	80 mm
Height	60 mm
Materials	ABS
Housing colour	Grey
Protection category	IP65
Weight with packaging	293 g
Product weight	293 g

ELECTRICAL DATA	
Operating voltage type	AC

APPROVAL DATA	
WEEE	No
Conforms with RED directive	No
Conforms with ATEX-directive	No
Conforms with CCC	No
Conforms with UL	No
Conforms with FCC	No
Conforms with IC	No
EAC certificate available	No
Conforms with AS-I	No
ICAO Certification	No
Conforms with DNV	No
Conforms with RoHS CN	No

! For additional installation and mounting information, refer to the appropriate user guide at www.werma.com. This printed copy is for information only and is subject to alteration.

Permanent Light 800 / Accessories

Surface housing 3-fold GY

DRAWING

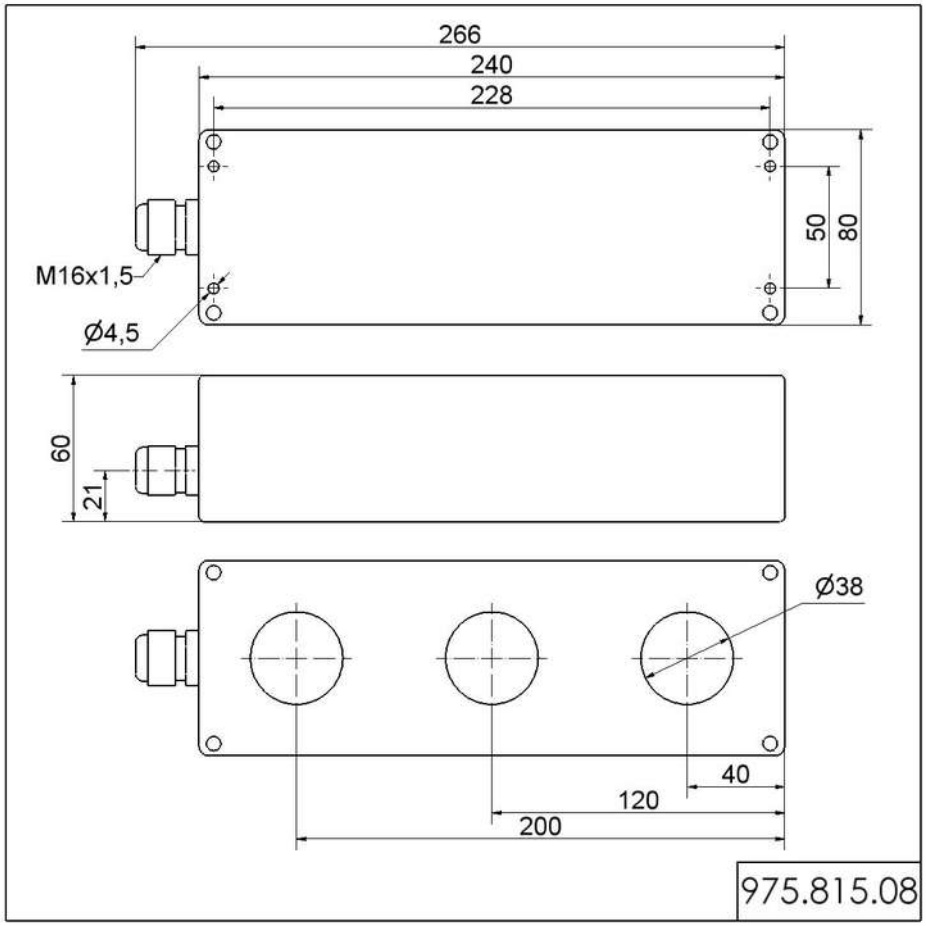

! For additional installation and mounting information, refer to the appropriate user guide at www.werma.com. This printed copy is for information only and is subject to alteration.