MURR ELEKTRONIK
stay connected

M12 male 0° A-cod. screw terminal

5-pol., max. 0,75mm², 6 - 8mm

Male straight
M12, 5-pole
Screw terminals
Sealing range (cable Ø): 6...8 mm
Plastic housings with good resistance against chemicals and oils.
The resistance to aggressive media should be individually tested for your application. Further details on request.

Link to Product

Illustration



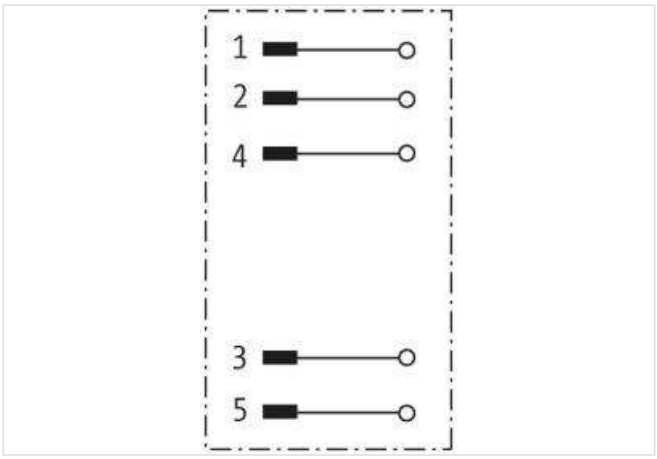

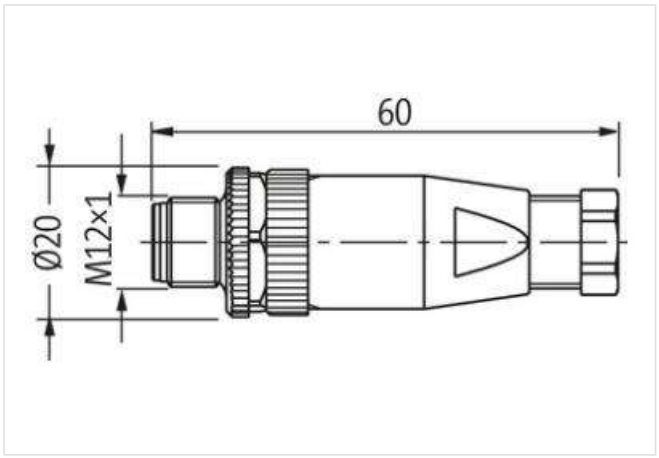

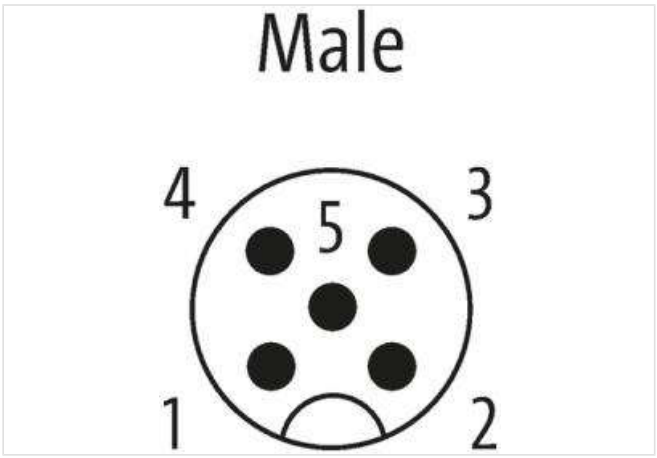

Product may differ from Image

Form

Form	12761

Technical Data

Operating voltage	max. 60 V AC/DC

The information in this brochure has been compiled with the utmost care.
Liability for the correctness completeness and topicality of the information is restricted to gross negligence. Version: 2023-03-17

Operating voltage (only UL listed)	max. 125 V AC/DC
Rated surge voltage	1.5 kV
Operating current per contact	max. 4 A; max. 3 A (UL-Recognized)
Material group	III
Locking of ports	Screw thread (M12×1 mm) recommended torque 0.6 Nm, self-securing
Connection cross section	max. 0.75 mm²
Sealing range (cable Ø)	6...8 mm
Protection	IP67 inserted and tightened (EN 60529)
Compression gland	M12 (SW18)
Over voltage category	II
General data	
Pollution Degree	3
Temperature range	-40...+85 °C
Material housing	PA
Dimensions H×W×D	60×20×20 mm
Product article number of manufacturer	7000-12761-0000000

The information in this brochure has been compiled with the utmost care.
Liability for the correctness completeness and topicality of the information is restricted to gross negligence. Version: 2023-03-17