

Model Number

CCN15-30GS60-A2-V1

Features

- **15 mm non-flush**
- **Operating distance adjustable via potentiometer**
- **High EMC resistance**
- **Stainless steel version**
- **Complementary outputs**
- **Operating voltage range 10 V ... 60 V DC**

Accessories

BF 30
Mounting flange, 30 mm

V1-G
Female connector, M12, 4-pin, field attachable

V1-W
Female connector, M12, 4-pin, field attachable

V1-G-2M-PUR
Female cordset, M12, 4-pin, PUR cable

V1-W-2M-PUR
Female cordset, M12, 4-pin, PUR cable

Technical Data

General specifications		
Switching function		complementary
Output type		PNP
Rated operating distance	s_n	15 mm
Installation		non-flush
Output polarity		DC
Assured operating distance	s_a	0 ... 12.1 mm
Output type		4-wire
Nominal ratings		
Installation conditions		
A		18 mm
B		10 mm
C		30 mm
F		60 mm
Operating voltage	U_B	10 ... 60 V DC
Switching frequency	f	0 ... 10 Hz
Reverse polarity protection		reverse polarity protected
Short-circuit protection		pulsing
Voltage drop	U_d	≤ 2.8 V
Operating current	I_L	0 ... 200 mA
Off-state current	I_r	0 ... 0.5 mA typ. 0.1 µA at 25 °C
Off-state current T_U =40 °C, switching element off		≤ 100 µA
No-load supply current	I_0	≤ 20 mA
Time delay before availability	t_v	≤ 50 ms
Switching state indicator		LED, yellow
Functional safety related parameters		
$MTTF_d$		750 a
Mission Time (T_M)		20 a
Diagnostic Coverage (DC)		0 %
Indicators/operating means		
Potentiometer		sensitivity adjustment
Ambient conditions		
Ambient temperature		-25 ... 70 °C (-13 ... 158 °F)
Storage temperature		-40 ... 85 °C (-40 ... 185 °F)
Mechanical specifications		
Connection type		Connector plug M12 x 1 , 4-pin
Housing material		Stainless steel 1.4305 / AISI 303
Sensing face		PBT
Degree of protection		IP67
Compliance with standards and directives		
Standard conformity		
Standards		EN 60947-5-2:2007 EN 60947-5-2/A1:2012 IEC 60947-5-2:2007 IEC 60947-5-2 AMD 1:2012
Approvals and certificates		
UL approval		cULus Listed, General Purpose
CCC approval		Certified by China Compulsory Certification (CCC)

Dimensions

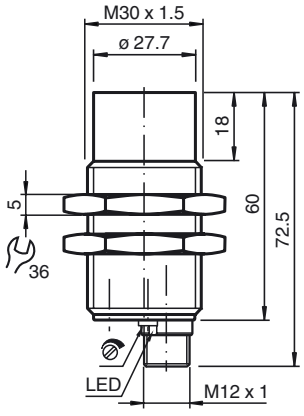

Electrical Connection

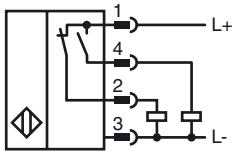

Release date: 2018-10-09 11:03 Date of issue: 2018-10-09 189958_eng.xml

Pinout

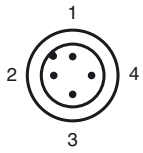

Wire colors in accordance with EN 60947-5-2

1	BN	(brown)
2	WH	(white)
3	BU	(blue)
4	BK	(black)

Installation Conditions

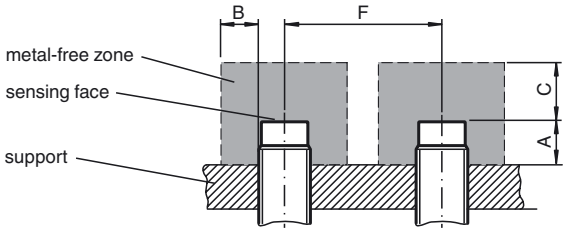

Release date: 2018-10-09 11:03 Date of issue: 2018-10-09 189958_eng.xml

Refer to “General Notes Relating to Pepperl+Fuchs Product Information”.
Pepperl+Fuchs Group www.pepperl-fuchs.com
USA: +1 330 486 0001 fa-info@us.pepperl-fuchs.com
Germany: +49 621 776 4411 fa-info@de.pepperl-fuchs.com
Singapore: +65 6779 9091 fa-info@sg.pepperl-fuchs.com
PEPPERL+FUCHS SENSING YOUR NEEDS