Sensor Solutions for Mobile Lift Applications



Telemecanique
Sensors
Simply easy!

> Telemecanique Sensors

Simply easy!

Simplicity

+

Expertise

+

Proximity



Telemecanique Sensors is a world-class global brand offering a comprehensive line of products with over 25,000 types of sensors, including limit switches, pressure sensors, photoelectric sensors and proximity sensors. In addition, we provide state-of-the-art RFID systems that are compatible with many PLC manufacturers.

Telemecanique Sensors has all the right agency approvals, such as UL, IEC, NEMA, CE, CCC, UL, CSA, and EAC.

Telemecanique Sensors is focused on three core values — Simplicity, Proximity, and Expertise. We have become experts in factory automation sensors as well as specialists in demanding applications, making our customers' lives ''Simply easy!''

> Innovation focus



The new, software-configurable XXW54 Wide Beam Ultrasonic Sensor is a highly effective way to avoid mobile equipment collisions, both on the ground and when boom or scissor lift platforms rise into the air. The newly designed PCB of the sensor expands the width of the detection beam so it can cover a greater area.

Detection over a large coverage area

- Emits a beam with a 50° angle up to 1.5 meters.
- When conditions require multiple sensors installed in close proximity to each other, the 'synchronization' feature of the new XX Ultrasonic sensors allows reliable detection of objects from each sensor with minimal risk of cross-talk.

Detection of obstacles in harsh environments

- Anti-UV plastic housing allows operation in temperatures ranging from -40° C to +70° C.

Highly immune to electromagnetic interference

- The new XX Ultrasonic Sensors are E2-certified for mobile equipment. This entails a higher immunity to electromagnetic interference even in the most demanding environments.

Truck loading cranes

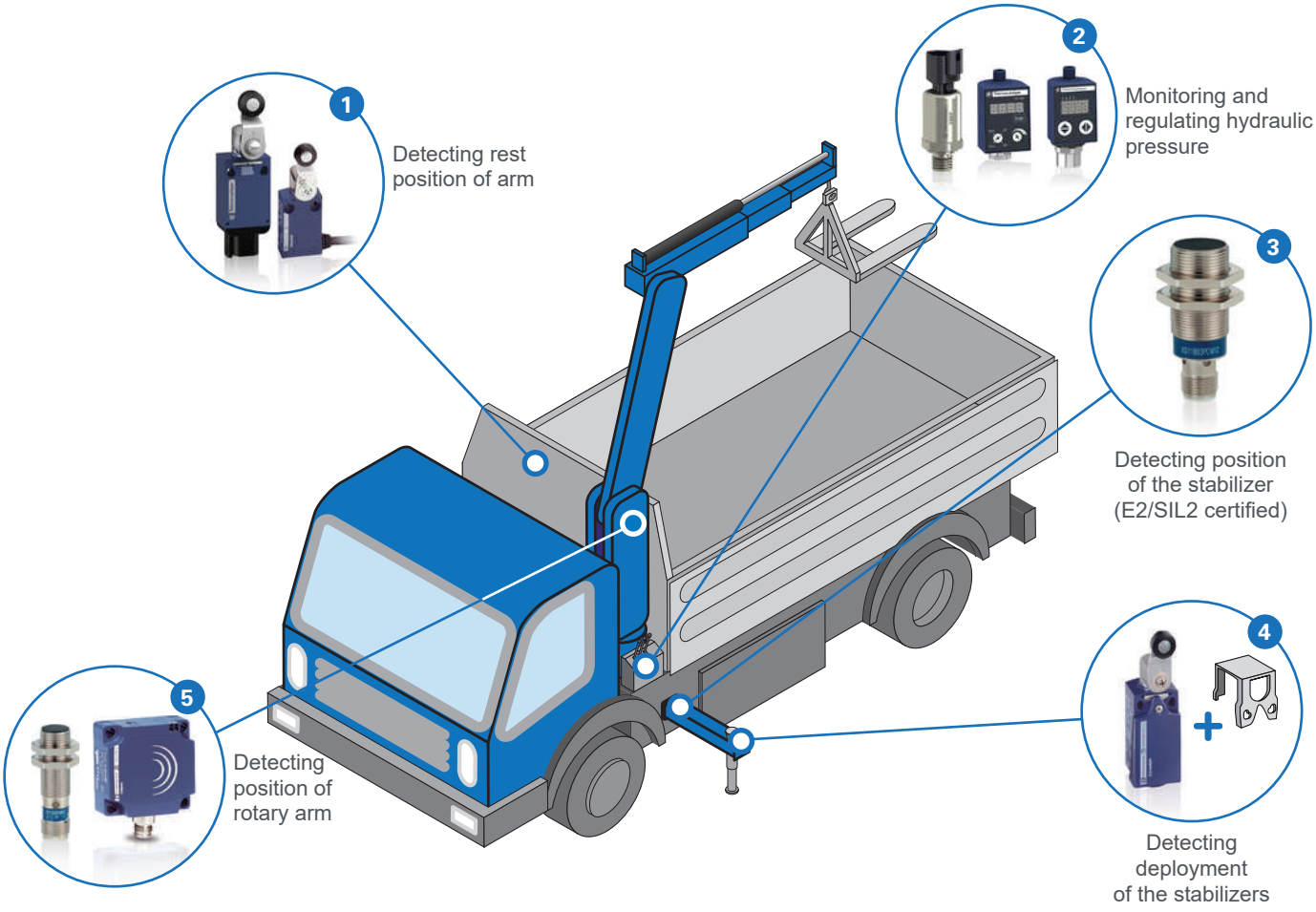

1	XCMV or XCMD Limit Switch	Compact body and modular head allows easy mechanical adaptation.
2	XMEP / XMLR / ZMLP Pressure Sensors / Monitor	Compact and robust for reliable operation.
3	XS SIL2 Inductive Sensor	Compact, robust, and increases level of safety.
4	XCKD Limit Switch & XCKZ05 Accessory	Robust for increased resistance to the operating environment.
5	XS Inductive Sensor	Easy installation and adjustment.





Garbage Trucks

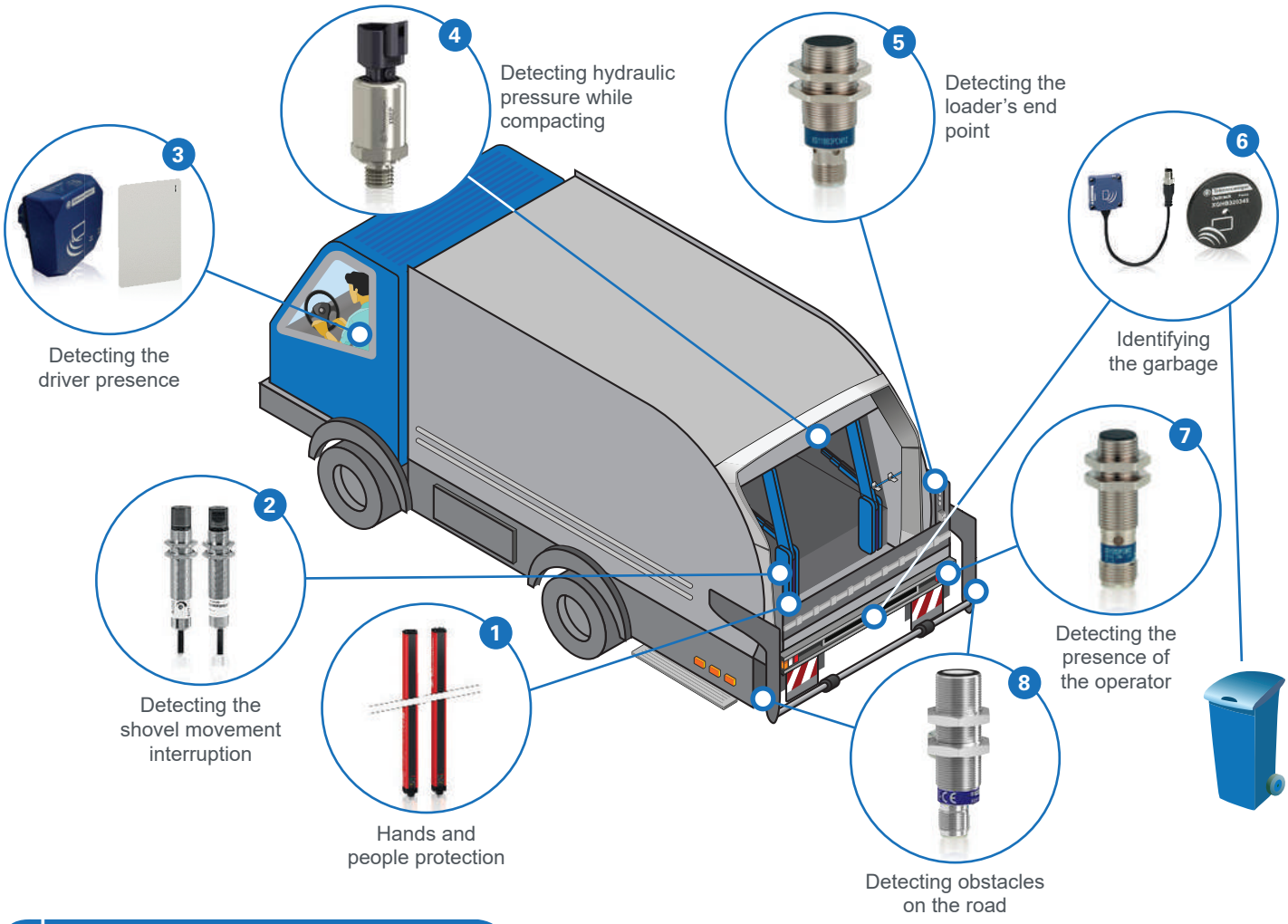

1	XUSL Light Curtains	Compact and robust for reliable operation.
2	XU2S Photoelectric Sensor	High levels of reliability and quality as well as long life duration.
3 6	XG RFID Systems	Open for a free choice of electronic tags and networks.
4	XMEP Pressure Transmitter	Easy installation and adjustment.
5 7	XS Inductive Sensors	Simple set-up and maintenance.
8	XX Ultrasonic Sensors	E2-certified for Mobile Equipment with better immunity against EMC interference.





Scissor Lift Platforms

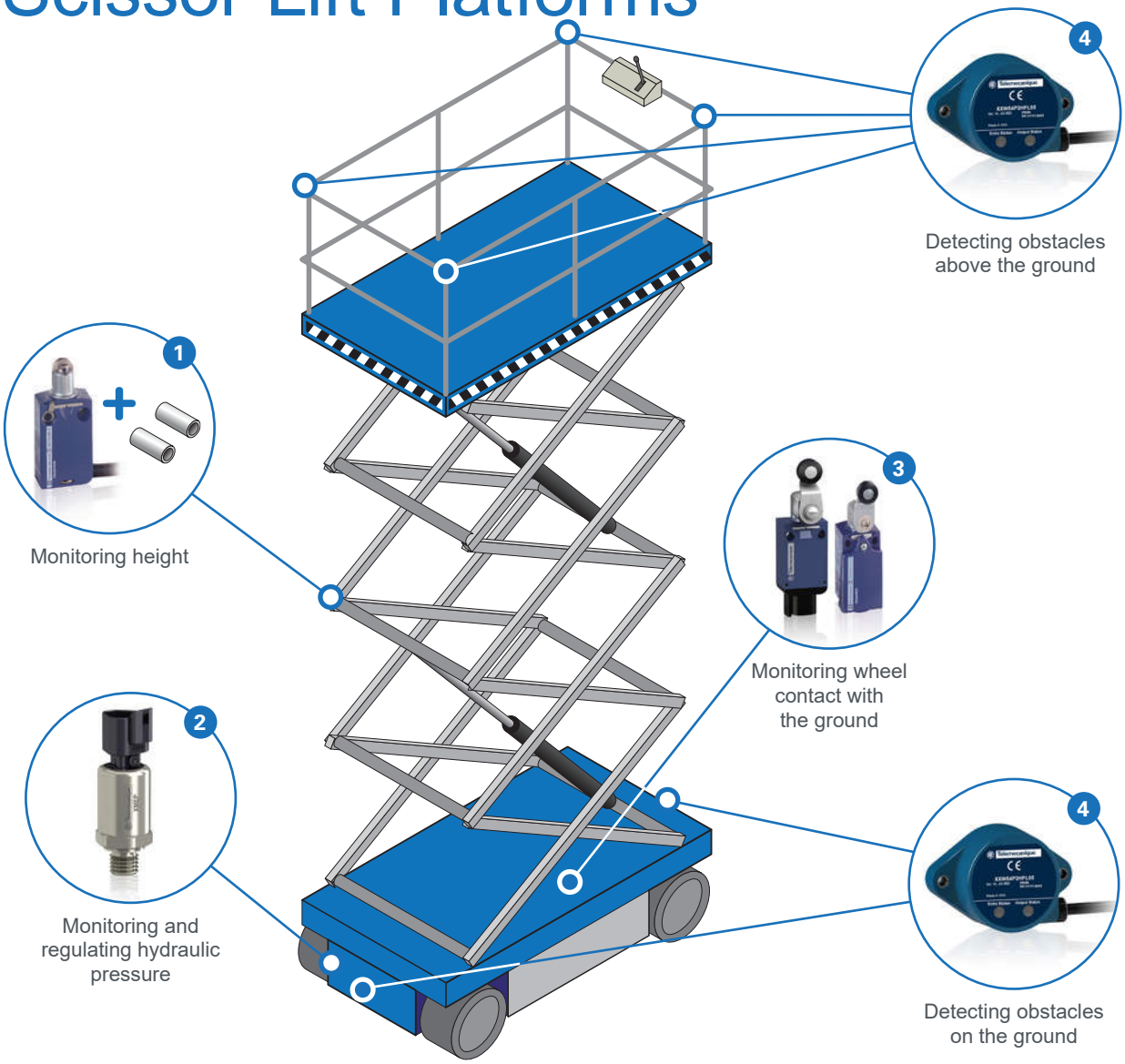

1	XCMD Limit Switch & XCMZ06 Accessory	Compact and multitrack mounting for detecting the various heights.
2	XMEP Pressure Sensor	Compact and robust for reliable operation.
3	XCMV or XCKP Limit Switch	Compact, providing easy mechanical adaptation.
4	XXW54 Wide Beam Ultrasonic Sensors	E-certified with better immunity against EMC interference and a larger beam width.

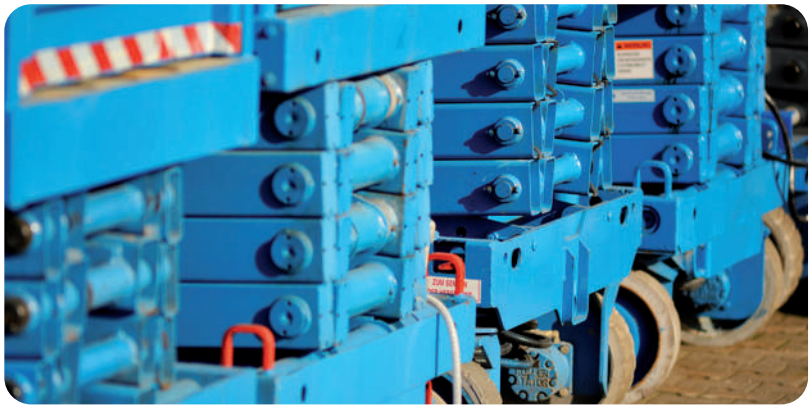



Boom Lift Platforms

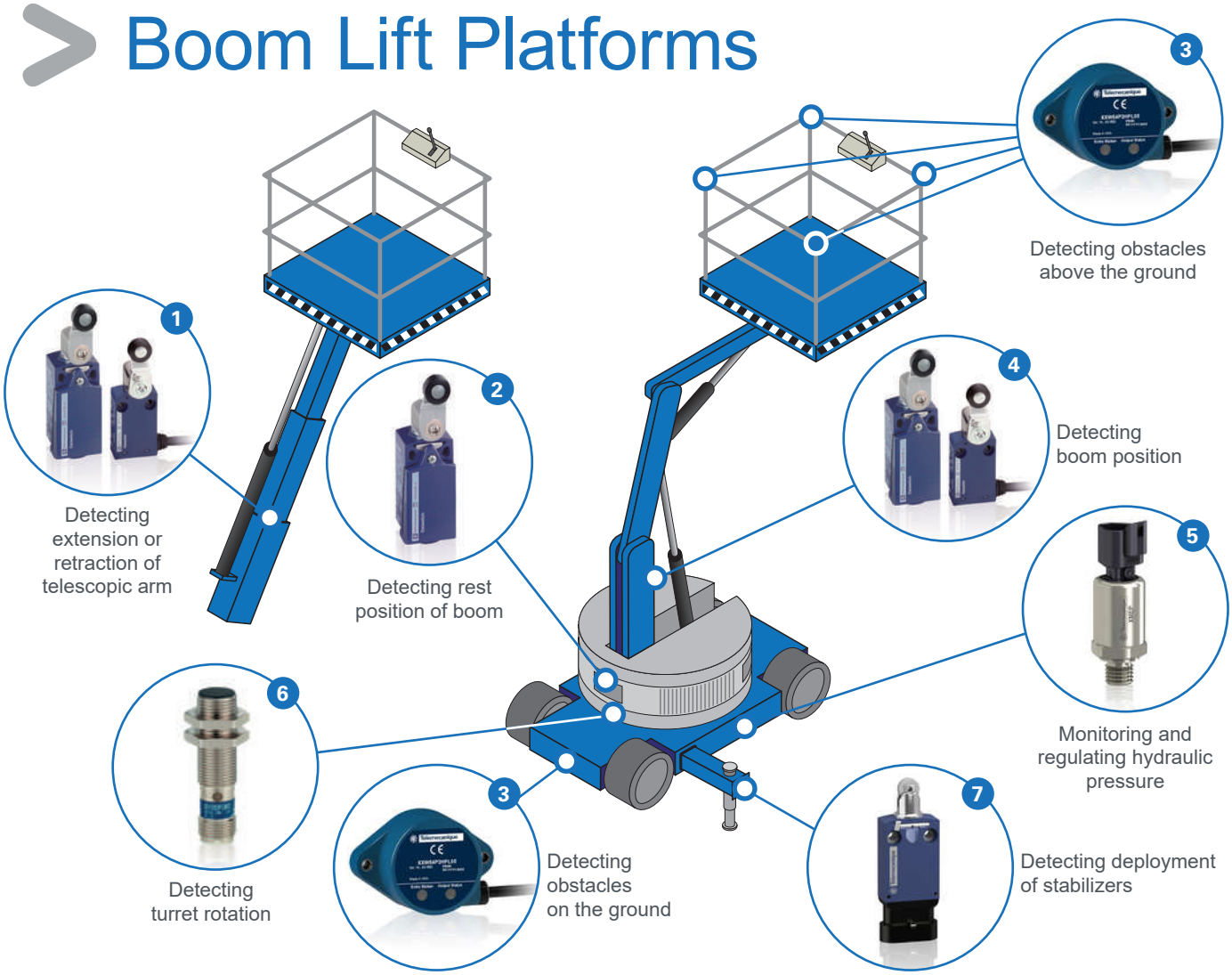

1 4	XCKP or XCMD Limit Switch	Compact body and modular head allows easy mechanical adaptation.
2	XCKP Limit Switch	Compact, providing easy mechanical adaptation.
3	XXW54 Wide Beam Ultrasonic Sensors	E-certified with better immunity against EMC interference and a larger beam width.
5	XMEP Pressure Transmitter	Compact and robust for reliable operation.
6	XS Inductive Sensors	Easy installation and adjustment.
7	XCMD Limit Switch	The most compact Limit Switch body on the market with integrated connectors.





Fork Lifts

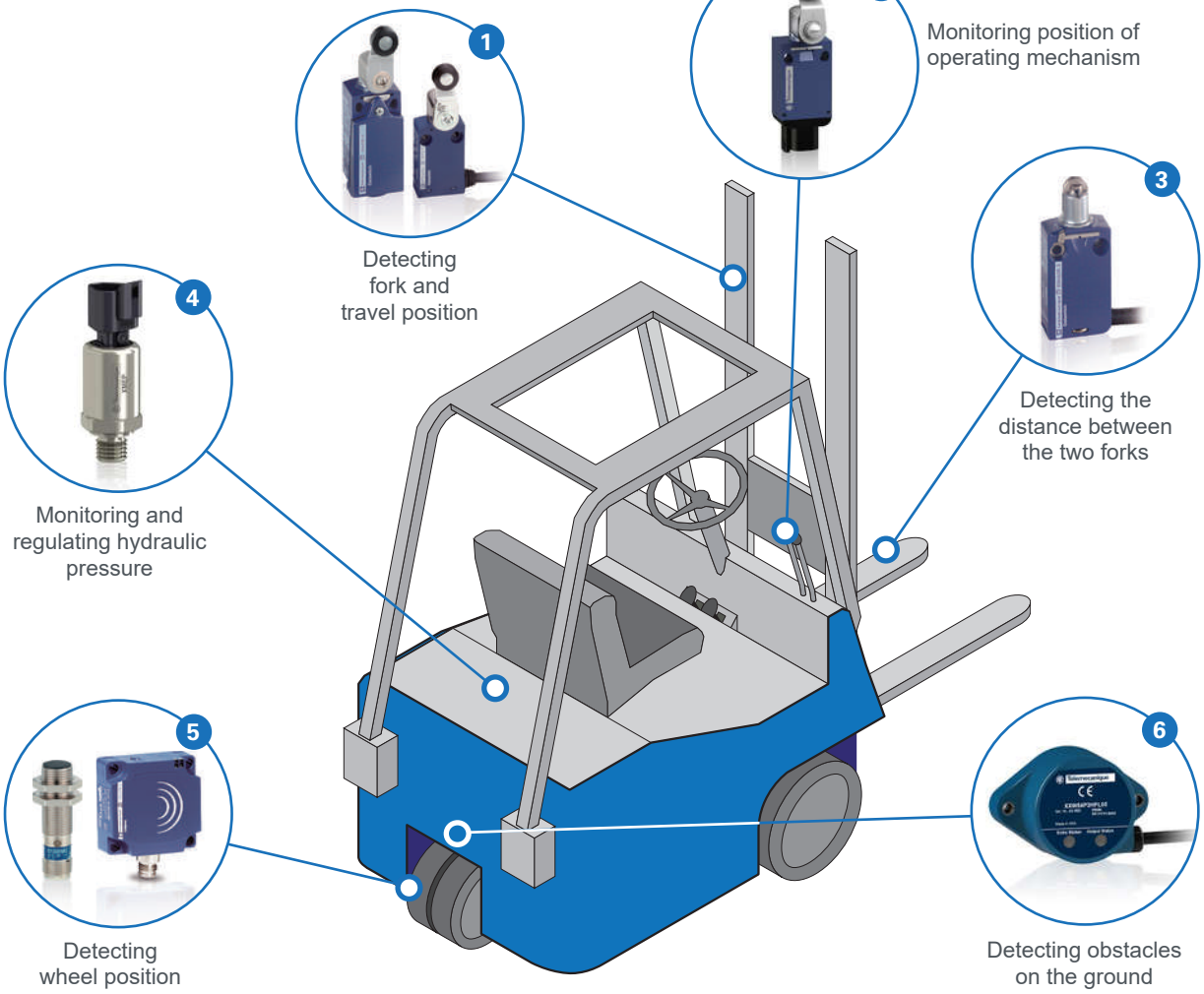

1	XCKP or XCMD Limit Switch	Compact body and modular head allows easy mechanical adaptation.
2	XCMV Limit Switch	The most compact Limit Switch body on the market with integrated connectors.
3	XCMD Limit Switch	Compact body and a wide variety of heads for easier integration.
4	XMEP Pressure Sensor	Compace and robust for reliable operation.
5	XS Inductive Sensor	Easy installation and adjustment.
6	XXW54 Wide Beam Ultrasonic Sensors	E-certified with better immunity against EMC interference and a larger beam width.





Choose product best-suited for your application

Limit switches



	Contact	Connection			
XCKD Metal	NO+NC Snap	1/2 NPT	XCKD2110N12	XCKD2102N12	XCKD2118N12
		M16	XCKD2110P16	XCKD2102P16	XCKD2118P16
		Pg11	XCKD2110G11	XCKD2102G11	XCKD2118G11
XCKP Plastic	NO+NC Snap	1/2 NPT	XCKP2110N12	XCKP2102N12	XCKP2118N12
		M16	XCKP2110P16	XCKP2102P16	XCKP2118P16
		Deutsch	XCKP2110D44	XCKP2102D44	XCKP2118D44
XCKT Plastic	NO+NC Snap	1/2 NPT	XCKT2110N12	XCKT2102N12	XCKT2118N12
		M16	XCKT2110P16	XCKT2102P16	XCKT2118P16
		Pg11	XCKT2110G11	XCKT2102G11	XCKT2118G11
XCMD Metal	NO+NC Snap	1 m	XCMD2110L1	XCMD2102L1	XCMD2115L1
	NO+NC Slow	1 m	XCMD2510L1	XCMD2502L1	XCMD2515L1









XCMD	NO+NC snap	NO+NC slow
	AMP 4P Connector	
Plunger	XCMD2110AM4	XCMD2510AM4
Roller plunger	XCMD2102AM4	XCMD2502AM4
Plastic roller lever	XCMD2115AM4	XCMD2515AM4



XCMV		
	Deutsch DT04 4P Connector	
Plunger	XCMV2110D44	XCMV2510D44
Roller plunger	XCMV2102D44	XCMV2502D44
Plastic roller lever	XCMV2115D44	XCMV2515D44



	M12 Connector	
Plunger	XCMV2110M12	XCMV2510M12
Roller plunger	XCMV2102M12	XCMV2502M12
Plastic roller lever	XCMV2115M12	XCMV2515M12



Inductive sensors



Ø 12 mm



Ø 18 mm



15 x 32 x 8 mm



26 x 26 x 13 mm



40 x 40 x 15 mm



Ø 12 mm



Ø 18 mm

XS	Sensing distance		4 mm	8 mm	5 mm	10 mm	15 mm
DC 3 wires NO	PNP	cable	XS112B3PAL2	XS118B3PAL2	XS7F1A1PAL2	XS7E1A1PAL2	XS7C1A1PAL2
		connector	XS112B3PAM12	XS118B3PAM12	XS7F1A1PAL01M8	XS7E1A1PAM8	XS7C1A1PAM8
	NPN	cable	XS112B3NAL2	XS118B3NAL2	XS7F1A1NAL2	XS7E1A1NAL2	XS7C1A1NAL2
		connector	XS112B3NAM12	XS118B3NAM12	XS7F1A1NAL01M8	XS7E1A1NAM8	XS7C1A1NAM8

DC 4 wires NO+NC	4 mm	8 mm
	XS112B3PCL2	XS118B3PCL2
	XS112B3PCM12	XS118B3PCM12

E2 CERTIFIED

Pressure transmitters

XMEP	Connector	Analogue output	0...60 bar	0...100 bar	0...250 bar	0...400 bar	0...600 bar
	M12	0,5-4, 5V	XMEP060BD11F	XMEP100BD11F	XMEP250BD11F	XMEP400BD11F	XMEP600BD11F
		4-20mA	XMEP060BD21F	XMEP100BD21F	XMEP250BD21F	XMEP400BD21F	XMEP600BD21F
		0-10V	XMEP060BD71F	XMEP100BD71F	XMEP250BD71F	XMEP400BD71F	XMEP600BD71F
	Deutsch DT04-3P	0,5-4, 5V	XMEP060BT11F	XMEP100BT11F	XMEP250BT11F	XMEP400BT11F	XMEP600BT11F
		4-20mA	XMEP060BT21F	XMEP100BT21F	XMEP250BT21F	XMEP400BT21F	XMEP600BT21F
		0-10V	XMEP060BT71F	XMEP100BT71F	XMEP250BT71F	XMEP400BT71F	XMEP600BT71F
	AMP Superseal 1,5 3-pin	0,5-4, 5V	XMEP060BV11F	XMEP100BV11F	XMEP250BV11F	XMEP400BV11F	XMEP600BV11F
		4-20mA	XMEP060BV21F	XMEP100BV21F	XMEP250BV21F	XMEP400BV21F	XMEP600BV21F
		0-10V	XMEP060BV71F	XMEP100BV71F	XMEP250BV71F	XMEP400BV71F	XMEP600BV71F









Display for XMEP

PNP
2 switching outputs
ZMLPA2P0SH

PNP
Analogue 4...20mA
+ 1 swithing output
ZMLPA2P0SH

XMLR	Outputs	0...100 bar	0...160 bar	0...250 bar	0...400 bar	0...600 bar
	2 switching outputs	XMLR100M2P05	XMLR160M2P05	XMLR250M2P05	XMLR400M2P05	XMLR600M2P05
	Analogue 4...20mA + 1 switching output	XMLR100M1P05	XMLR160M1P05	XMLR250M1P05	XMLR400M1P05	XMLR600M1P05



Ultrasonic Sensors



Sensing Distance	Analogue Output	Digital output	Connection	Reference Number
3m	0,5 - 4,5 V	PNP	0.15 cable + 6-pin Deutsch male connector	XXW54P3HPLO1DM6
			0.5M cable	XXW54P3HPL05
1m Adjustable	n/a	PNP	5-pin M12 male connector	XXS18S1PM12
	4-20mA	n/a		XXS18S1AM12

Discover our complete offer: www.tesensors.com or contact your local sales agency

Schneider Electric Industries SAS

Head Office
35, rue Joseph Monier – CS 30323
F92506 Rueil-Malmaison Cedex
FRANCE
www.tesensors.com

Due to the constant evolution of standards and equipment, the specifications indicated in the text and images of this document can only be guaranteed after confirmation by our departments. Print: Schneider Electric Photos: Schneider Electric

©2021 Schneider Electric. All Rights Reserved. Schneider Electric, OsiSense, and Telemecanique are trademarks and the property of Schneider Electric SE, its subsidiaries and affiliated companies. All other trademarks are the property of their respective owners.

May, 2021 9006BR1103 R05/21