ebm-papst Mulfingen GmbH & Co. KG
Bachmühle 2
D-74673 Mulfingen
Phone: +49(0)7938/81-0
Fax: +49(0)7938/81-110
info1@de.ebmpapst.com
www.ebmpapst.com

CONTENTS

1. SAFETY REGULATIONS AND NOTES 1
1.1 Levels of hazard warnings 1
1.2 Staff qualification 1
1.3 Basic safety rules 1
1.4 Electrical voltage 1
1.5 Safety and protective functions 2
1.6 Mechanical movement 2
1.7 Emission 2
1.8 Hot surface 2
1.9 Transport 2
1.10 Storage 2
1.11 Disposal 2
2. PROPER USE 3
3. TECHNICAL DATA 4
3.1 Graphic rendition of products 4
3.2 Nominal data 5
3.3 Technical description 5
3.4 Mounting data 5
3.5 Storage conditions 5
4. CONNECTION AND START-UP 6
4.1 Connecting the mechanical system 6
4.2 Connecting the electrical system 6
4.3 Connection of the cables 6
4.4 Connection diagram 7
4.5 Checking the connections 8
4.6 Switch on device 8
4.7 Switching off the device 8
5. MAINTENANCE, MALFUNCTIONS, POSSIBLE CAUSES AND REMEDIES 8
5.1 Cleaning 9
5.2 Safety test 9

Translation of the original operating instructions

1. SAFETY REGULATIONS AND NOTES

Please read these operating instructions carefully before starting to work with the device. Observe the following warnings to prevent malfunctions or physical damage to both property and people.
These operating instructions are to be regarded as part of this device.
If the device is sold or transferred, the operating instructions must accompany it.
These operating instructions may be duplicated and forwarded for information about potential dangers and their prevention.

1.1 Levels of hazard warnings

These operating instructions use the following hazard levels to indicate potentially hazardous situations and important safety regulations:



DANGER
Indicates an imminently hazardous situation which, if not avoided, will result in death or serious injury. Compliance with the measures is mandatory.

WARNING
Indicates a potentially hazardous situation which, if not avoided, could result in death or serious injury. Exercise extreme caution while working.

CAUTION
Indicates a potentially hazardous situation which, if not avoided, may result in minor or moderate injury or damage of property.

NOTE
A potentially harmful situation can occur and, if not avoided, can lead to property damage.

1.2 Staff qualification

Only specialised electrical personnel may install the device, perform the test run and work on the electrical system.
Only trained and authorised specialist personnel are permitted to transport, unpack, assemble, operate or maintain the device, or to use it in any other manner.

1.3 Basic safety rules

Any safety hazards stemming from the device must be re-evaluated once it is installed in the end device.
Observe the following when working on the unit:

⇒ Do not make any modifications, additions or conversions to the device without the approval of ebm-papst.

1.4 Electrical voltage

⇒ Check the electrical equipment of the device at regular intervals.

⇒ Remove loose connections and defective cables immediately.

WARNING
Terminals and connections have voltage even with a unit that is shut off
Electric shock

→ Wait for five minutes after disconnecting the voltage at all poles before touching the unit.

CAUTION
The motor restarts automatically when operating voltage is applied, e.g. after a power failure.
Danger of injury

→ Keep out of the danger zone of the device.

→ When working on the device, switch off the mains

supply voltage and secure the latter from being switched on again.

→ Wait until the device stops.

1.5 Safety and protective functions



DANGER
Missing safety device and non-functioning safety device
If there is no safety device, you could be seriously injured, for example by reaching into the running device with your hands.

→ Operate the device only with a fixed and isolating safety protection and a fixed guard grille.
The guard must withstand the kinetic energy of a fan blade.

→ The device is a built-in component. You, the owner/ operator, are responsible for providing adequate protection for the device.

→ Instantly stop the device once you detect a missing or ineffective protective feature.

1.6 Mechanical movement



DANGER
Rotating device
Body parts coming into contact with the rotor and impeller can be injured.

→ Secure the device against accidental contact.

→ Before working on the system/machine, wait until all parts have come to a standstill.

WARNING
Rotating device
Long hair, loose items of clothing and jewellery could become entangled and pulled into the device. You could be injured.

→ Do not wear any loose clothing or jewellery while working on rotating parts.

→ Protect long hair by wearing a cap.

1.7 Emission

WARNING
Depending on the installation and operating conditions, a sound pressure level greater than 70 dB(A) may arise.
Danger of noise-induced hearing loss

→ Take appropriate technical safety measures.

→ Protect operating personnel with appropriate safety equipment, e.g. hearing protection.

1.8 Hot surface



CAUTION
High temperature at the motor housing
Danger of burn injuries

→ Ensure that sufficient protection against accidental contact is provided.

1.9 Transport

NOTE
Transport of device

→ Transport the device in its original packaging only.

→ Secure the device so that it does not slip, e.g. by using a clamping strap.

1.10 Storage

Store the device in a dry and weatherproof manner in the original packing in a clean environment.
Protect the device from environmental impacts and dirt until the final installation.
We recommend storing the device for a maximum of one year.
Maintain the storage temperature, see
chapter 3.5 Storage conditions.

1.11 Disposal

When disposing of the device, please comply with all relevant requirements and regulations applicable in your country.

Translation of the original operating instructions

2. PROPER USE

The device is exclusively designed as a built-in device for moving air according to its technical data.
Any other or secondary use is deemed improper and constitutes a misuse of the device.
Installations on the customer's side must meet the mechanical, thermal and service life-related stresses that can occur.

Proper use also includes:

- Moving air with a density of 1.2 kg/m³.
- Using the device in accordance with the permitted ambient temperature, see chapter 3.5 Storage conditions and chapter 3.2 Nominal data.
- Operating the device with all protective features in place.
- Minding the operating instructions.

Improper use

Using the device in the following ways is particularly prohibited and may cause hazards:

- Moving air that contains abrasive particles.
- Moving highly corrosive air, e.g. salt spray mist. Exceptions are devices that are intended for salt spray mist and protected accordingly.
- Moving air that contains dust pollution, e.g. suctioning off saw dust.
- Operating the device close to flammable materials or components.
- Operating the device in an explosive atmosphere.
- Using the device as a safety component or for taking on safety-related functions.
- In addition, all application options that are not listed under proper use.

Translation of the original operating instructions

ebm-papst Mulfingen GmbH & Co. KG · Bachmühle 2 · D-74673 Mulfingen · Phone: +49(0)7938/81-0 · Fax: +49(0)7938/81-110 · info1@de.ebmpapst.com · www.ebmpapst.com

3. TECHNICAL DATA

3.1 Graphic rendition of products

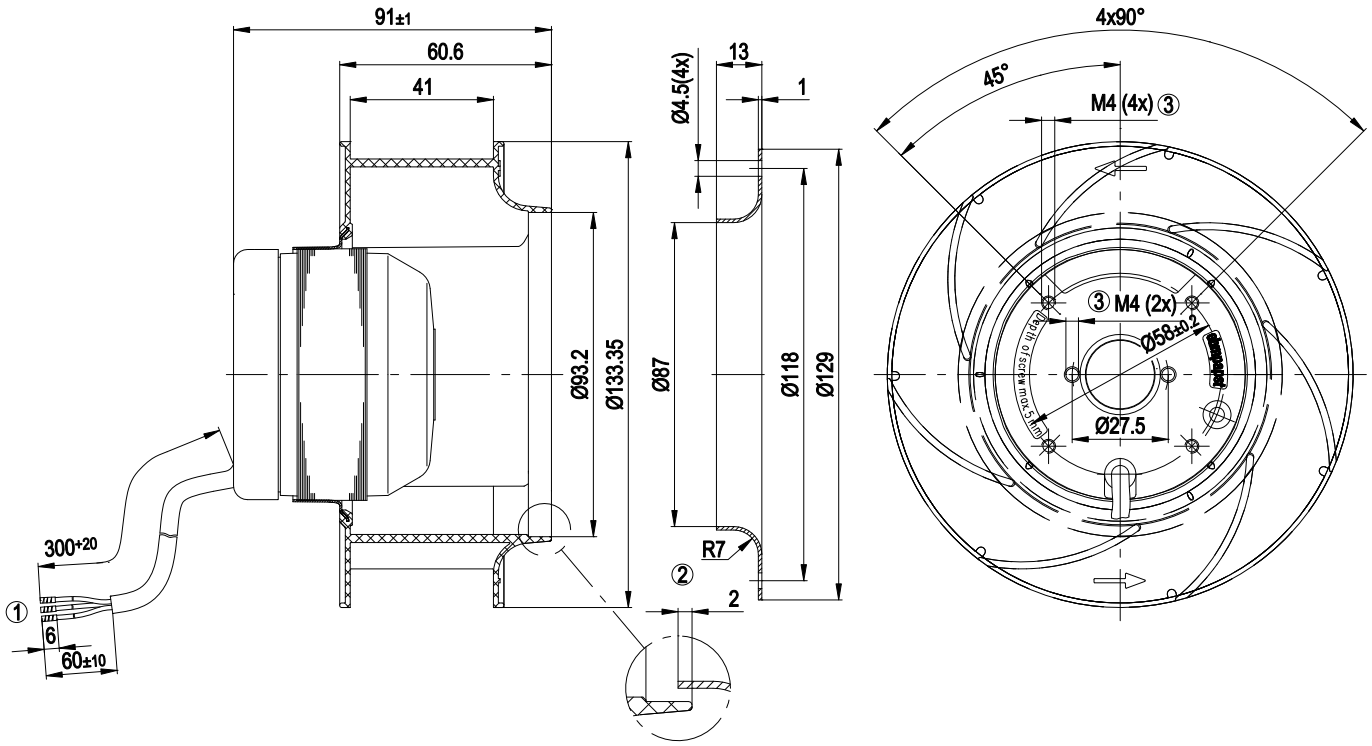

All measures have the unit mm.

1	Connection line PVC, 3x brass lead tips crimped
2	Accessory part: Inlet nozzle 09566-2-4013, not included in the standard scope of delivery
3	Screw depth max. 5 mm

Translation of the original operating instructions

ebm-papst Mulfingen GmbH & Co. KG · Bachmühle 2 · D-74673 Mulfingen · Phone: +49(0)7938/81-0 · Fax: +49(0)7938/81-110 · info1@de.ebmpapst.com · www.ebmpapst.com

3.2 Nominal data

Motor	M2S052-CA

Phase	1~	1~
Nominal voltage [V]	230	230
Frequency [Hz]	50	60

Type of data definition	rfa	rfa
Valid for approval / standard	CE	CE
Speed [min^{-1}]	2780	3200
Power input [W]	36	34
Current draw [A]	0.25	0.21
Min. back pressure [Pa]	0	0
Max. ambient temperature [°C]	40	60

ml = max. load · me = max. efficiency · rfa = running at free air
cs = customer specs · cu = customer unit

Subject to alterations

3.3 Technical description

Leackage current	< 0.75 mA
Size	133 mm
Operation mode	S1
Direction of rotation	Clockwise, seen on rotor
Mounting position	Shaft horizontal or rotor on bottom; rotor on top on request
Insulation class	"B"
Cable exit	Axial
Condensate discharge holes	Rotor-side
Bearing motor	Ball bearing
Mass	0.9 kg
Material of impeller	PA plastic 6, fiberglass-reinforced
Motor protection	Thermal overload protector (TOP) wired internally
Product conforming to standard	CE; EN 60335-1
Surface of rotor	Coated in black
Number of blades	7
Type of protection	IP 22; Depending on installation and position
Protection class	I
Approval	CCC

3.4 Mounting data

For depth of screw, see chapter 3.1 Graphic rendition of products

⇒ Secure the mounting screws against accidentally coming loose (e.g. by using self-locking screws).

Strength class for mounting screws	8.8

You can obtain additional mounting data from the product drawing if necessary.

3.5 Storage conditions

⇒ Use the device in accordance with its protection type.

Max. permissible ambient motor temp. (transp./ storage)	+ 80 °C
Min. permissible ambient motor temp. (transp./storage)	- 40 °C

Translation of the original operating instructions

4. CONNECTION AND START-UP

4.1 Connecting the mechanical system



CAUTION
Cutting and crushing hazard when removing the fan from the packaging



→ Carefully seize the impeller to lift the device out of its packaging. Make sure to avoid any shock.

→ Wear safety shoes and cut-resistant safety gloves.

⇒ Install the device according to your application.

4.2 Connecting the electrical system



DANGER
Electric voltage on the device
Electric shock

→ Always install a protective earth.

→ Check the protective earth.

CAUTION
Electrical voltage
The fan is a built-in component and features no electrically isolating switch.

→ Only connect the fan to circuits that can be switched off with an all-pole separating switch.

→ When working on the fan, you must switch off the installation/machine in which the fan is installed and secure it from being switched on again.

NOTE
Water penetration into leads or wires
Water enters at the cable end on the customers side and can damage the device.

→ Make sure that the cable end is connected in a dry environment.



Connect the device only to circuits that can be switched off using an all-pole disconnecting switch.

4.2.1 Prerequisites

⇒ Check whether the data on the type plate agree with the connection data.

⇒ Before connecting the device, ensure that the supply voltage matches the operating voltage of the device.

⇒ Only use cables designed for current according to the type plate.

4.2.2 Voltage control



With open loop speed control using transformers or electronic voltage regulators (e.g. phase angle control), excessive current may occur.
In addition, noises can occur with phase angle control depending on the mounting situation.

4.2.3 Frequency inverter



Fit sinusoidal filters that work on all poles (live-live and live-earth) between the frequency inverter and the motor for operation with frequency inverters.
Depending on how the device is installed, noises may occur.

4.3 Connection of the cables

External leads are brought out of device.

⇒ Connect the lines according to your application. When doing so, observe chapter 4.4 Connection diagram.

Translation of the original operating instructions

4.4 Connection diagram

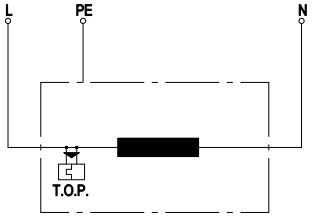

L	= blue
PE	= green / yellow
N	= brown
TOP	= Thermal overload protector

Translation of the original operating instructions

4.5 Checking the connections

⇒ Make sure that the power is off (all phases).

⇒ Secure it from being switched on again.

⇒ Check the correct fit of the connection lines.

4.6 Switch on device



WARNING
Hot motor housing
Fire hazard

→ Ensure that no combustible or flammable materials are located close to the fan.

Inspect the device for visible external damage and the proper function of the protective features before switching it on.

⇒ Apply the nominal voltage to the voltage supply.

4.7 Switching off the device

⇒ Disconnect the device from the supply voltage.

5. MAINTENANCE, MALFUNCTIONS, POSSIBLE CAUSES AND REMEDIES

Do not perform any repairs on your device. Return the device to ebm-papst for repair or replacement.

WARNING
Terminals and connections have voltage even with a unit that is shut off
Electric shock

→ Wait for five minutes after disconnecting the voltage at all poles before touching the unit.

CAUTION
The motor restarts automatically when operating voltage is applied, e.g. after a power failure.
Danger of injury

→ Keep out of the danger zone of the device.

→ When working on the device, switch off the mains supply voltage and secure the latter from being switched on again.

→ Wait until the device stops.



If the device remains out of use for some time, e.g. when in storage, we recommend switching the device on for at least 2 hours to allow any condensate to evaporate and to move the bearings.

Malfunction/error	Possible cause	Possible remedy
Motor does not turn	Mechanical blockage	Switch off, de-energise, and remove mechanical blockage
	Mains supply voltage faulty	Check mains supply voltage, restore power supply
	Faulty connection	Correct connection, see connection diagram
	Thermal overload protector responded	Allow motor to cool off, locate and rectify cause of error, if necessary cancel restart lock-out
Impeller running roughly	Imbalance in rotating parts	Clean the device, if imbalance still evident after cleaning, replace device
Overtemperature of motor	Ambient temperature too high	Lower ambient temperature if possible
	Unacceptable operating point	Check operating point
	Insufficient cooling	Improve cooling



If you have any other problems, contact ebm-papst.

Translation of the original operating instructions

5.1 Cleaning

NOTE
Damage to the device during cleaning.
Malfunction possible

→ Do not clean the device using a water jet or high-pressure washer.

→ Do not use any cleaners containing acids, bases or solvents.

5.2 Safety test

What has to be tested?	How to test?	Frequency
Protective casing against accidental contact	Visual inspection	at least every 6 months
Device for damage	Visual inspection	at least every 6 months
Mounting of device	Visual inspection	at least every 6 months
Mounting of connecting cables	Visual inspection	at least every 6 months
Mounting of protective earth connection	Visual inspection	at least every 6 months
Insulation of the cables	Visual inspection	at least every 6 months
Condensate discharge holes for clogging, as necessary	Visual inspection	at least every 6 months

Translation of the original operating instructions

ebm-papst Mulfingen GmbH & Co. KG · Bachmühle 2 · D-74673 Mulfingen · Phone: +49(0)7938/81-0 · Fax: +49(0)7938/81-110 · info1@de.ebmpapst.com · www.ebmpapst.com