8BVI0660HWS0.008-3

1 General information

- Integrated uncontrolled standstill and safe stop
- Integrated connection for motor holding brake and temperature sensor
- 2 slots for ACOPOSmulti plug-in modules

2 Order data

Order number	Short description	Figure
	Wall mounting	
8BVI0660HWS0.008-3	ACOPOSmulti3 inverter module, 66 A, AS, wall mounting, optimized for applications with decentralized, computationally intensive open-loop and closed-loop control requirements	
	Required accessories	
	Terminal block sets	
8BZVI1650SS.000-1A	Screw clamp terminal block set for ACOPOSmulti 8BVI0660HxSS, 8BVI0880HxSS, 8BVI1650HxSS, 8BVI0660HxSA, 8BVI0880HxSA and 8BVI1650HxSA modules: 1x 8TB2104.203L-00, 1x 8TB2108.2010-00	
	Optional accessories	
	Accessory sets	
8BXB000.0000-00	ACOPOSmulti accessory set for encoder buffering consisting of: 1x battery AA 3.6 V, 1x protective cover for battery holder	
	Fan modules	
8BXF001.0000-00	ACOPOSmulti fan module, replacement fan for ACOPOSmulti modules (8BxP/8B0C/8BVI/8BVE/8B0K)	
	Plug-in modules	
8BAC0120.000-1	ACOPOSmulti plug-in module, EnDat 2.1 interface	
8BAC0120.001-2	ACOPOSmulti plug-in module, EnDat 2.2 interface	
8BAC0121.000-1	ACOPOSmulti plug-in module, HIPERFACE interface	
8BAC0122.000-1	ACOPOSmulti plug-in module, resolver interface 10 kHz	
8BAC0123.000-1	ACOPOSmulti plug-in module, incremental encoder and SSI absolute encoder interface for RS422 signals	
8BAC0123.001-1	ACOPOSmulti plug-in module, incremental encoder interface for 5 V single-ended and 5 V differential signals	
8BAC0123.002-1	ACOPOSmulti plug-in module, incremental encoder interface for 24 V single-ended and 24 V differential signals	
8BAC0124.000-1	ACOPOSmulti plug-in module, SinCos interface	
8BAC0125.000-1	ACOPOSmulti plug-in module, SinCos EnDat 2.1/SSI/BiSS interface	
8BAC0130.000-1	ACOPOSmulti plug-in module, 2 digital outputs, 50 mA, max. 62.5 kHz, 2 digital outputs, 500 mA, max. 1.25 kHz, 2 digital inputs 24 VDC	
8BAC0130.001-1	ACOPOSmulti plug-in module, 2 digital outputs, 50 mA, max. 62.5 kHz, 4 digital outputs, 500 mA, max 1.25 kHz	
8BAC0132.000-1	ACOPOSmulti plug-in module, 4 analog inputs ±10 V	
8BAC0133.000-1	ACOPOSmulti plug-in module, 3 RS422 outputs for ABR encoder emulation, 1 MHz	
	POWERLINK/Ethernet cables	
X20CA0E61.00020	POWERLINK/Ethernet connection cable, RJ45 to RJ45, 0.2 m	
X20CA0E61.00025	POWERLINK/Ethernet connection cable, RJ45 to RJ45, 0.25 m	
X20CA0E61.00030	POWERLINK/Ethernet connection cable, RJ45 to RJ45, 0.3 m	
X20CA0E61.00035	POWERLINK/Ethernet connection cable, RJ45 to RJ45, 0.35 m	
X20CA0E61.00050	POWERLINK/Ethernet connection cable, RJ45 to RJ45, 0.5 m	
X20CA0E61.00100	POWERLINK/Ethernet connection cable, RJ45 to RJ45, 1 m	
	Shield component sets	
8SCS001.0000-00	ACOPOSmulti shield component set: 1x shield plate 4x type 1, 1x hose clamp, B 9 mm, D 12-22 mm	
8SCS002.0000-00	ACOPOSmulti shield component set: 1x clamping plate, 2x clamp D 4-13.5 mm, 2x screws	
8SCS003.0000-00	ACOPOSmulti shield component set: 1x shield mounting plate 4x 45°, 8x screws	
8SCS004.0000-00	ACOPOSmulti shield component set: 1x shield plate 4x type 0, 2x hose clamps, B 9 mm, D 32-50 mm	
8SCS010.0000-00	ACOPOSmulti shield component set: 1x ACOPOSmulti holding plate SK14-20, 1x shield connection clamp SK20	
	Terminal blocks	
8TB2104.203L-00	4-pin screw clamp terminal block, 1-row, pitch: 5.08 mm, label 3: T- T+ B- B+, coding L: 1010	
8TB2106.2010-00	6-pin screw clamp terminal block, 1-row, pitch: 5.08 mm, label 1: Numbered consecutively	
8TB2106.2210-00	Push-in terminal block 6-pin, 1-row, spacing: 5.08 mm, label 1: numbered consecutively	
8TB2108.2010-00	8-pin screw clamp terminal block, 1-row, pitch: 5.08 mm, label 1: Numbered consecutively	

Table 1: 8BVI0660HWS0.008-3 - Order data

3 Technical data

Order number	8BVI0660HWS0.008-3
General information	
B&R ID code	0x2F97
System requirements	
Automation Studio	4.6.1.x or later
Support	
Dynamic node allocation (DNA)	Yes
Cooling and mounting type	Wall mounting
Slots for plug-in modules	2
Certifications	
CE	Yes
UKCA	Yes
Functional safety [1]	Yes
UL	cULus E225616 Power conversion equipment
KC	Yes
DC bus connection	
Voltage	
Nominal	750 VDC
Continuous power consumption [2]	48.8 kW
Power dissipation depending on switching frequency [3]	
Switching frequency 5 kHz	In preparation
Switching frequency 10 kHz	In preparation
Switching frequency 20 kHz	In preparation
DC bus capacitance	1980 µF
Variant	ACOPOSmulti backplane
24 VDC power supply	
Input voltage	25 VDC ±1.6%
Input capacitance	32.9 µF
Max. power consumption	27 W + P_{SLOT1} + P_{SLOT2} + $P_{24\ V\ Out}$ + $P_{HoldingBrake}$ [4]
Variant	ACOPOSmulti backplane
24 VDC output	
Quantity	2
Output voltage	
DC bus voltage (U_{DC}): 260 to 315 VDC	25 VDC * (U_{DC}/315)
DC bus voltage (U_{DC}): 315 to 800 VDC	24 VDC ±6%
Fuse protection	250 mA (slow-blow) electronic, automatic reset
Motor connection	
Quantity	1
Continuous power per motor connection [2]	48 kW
Continuous current per motor connection [2]	66 A_{eff}
Reduction of continuous current depending on switching frequency [5]	
Switching frequency 5 kHz	1.4 A/K (starting at 41°C) [6]
Switching frequency 10 kHz	0.92 A/K (starting at -5°C) [7]
Switching frequency 20 kHz	0.56 A/K (starting at -90°C) [7]
Reduction of continuous current depending on installation elevation	
Starting at 500 m above sea level	6.6 A_{eff} per 1000 m
Peak current	132 A_{eff}
Nominal switching frequency	5 kHz
Possible switching frequencies [8]	5 / 10 / 20 kHz
Insulation stress of the connected motor per IEC TS 60034-25:2004 [9]	Limit value curve A [10]
Protective measures	
Overload protection	Yes
Short-circuit and ground fault protection	Yes
Max. output frequency	598 Hz [11]
Variant	
U, V, W, PE	M8 threaded bolts
Shield connection	Yes
Connection cross section range	
Flexible and fine-stranded wires	--- [12]
Terminal cable cross section dimension of shield connection	12 to 50 mm [13]
Max. motor line length depending on switching frequency	
Switching frequency 5 kHz	25 m
Switching frequency 10 kHz	25 m
Switching frequency 20 kHz	25 m

Table 2: 8BVI0660HWS0.008-3 - Technical data

Order number	8BVI0660HWS0.008-3
Motor holding brake connection	
Quantity	1
Output voltage [14]	24 VDC +5.8% / -0% [15]
Continuous current per connection	4.2 A
Max. internal resistance	0.15 Ω
Extinction potential	Approx. 30 V
Max. extinction energy per switching operation	3 Ws
Max. switching frequency	0.5 Hz
Protective measures	
Overload and short-circuit protection	Yes
Open-circuit monitoring	Yes
Undervoltage monitoring	Yes
Response threshold for open-circuit monitoring	Approx. 0.5 A
Response threshold for undervoltage monitoring	24 VDC +0% / -4%
Enable inputs	
Quantity	2
Circuit	Sink
Electrical isolation	
Input - Inverter module	Yes
Input - Input	Yes
Input voltage	
Nominal	24 VDC
Maximum	30 VDC
Input current at nominal voltage	Approx. 30 mA
Switching threshold	
Low	<5 V
High	>15 V
Switching delay at nominal input voltage	
Enable 1 → 0, PWM off	Max. 20.5 ms
Enable 0 → 1, ready for PWM	Max. 100 µs
Modulation compared to ground potential	Max. ±38 V
OSSD signal connections [16]	Permitted Max. test pulse length: 500 µs
Trigger inputs	
Quantity	2
Circuit	Sink
Electrical isolation	
Input - Inverter module	Yes
Input - Input	Yes
Input voltage	
Nominal	24 VDC
Maximum	30 VDC
Switching threshold	
Low	<5 V
High	>15 V
Input current at nominal voltage	Approx. 10 mA
Switching delay	
Rising edge	52 µs ±0.5 µs (digitally filtered)
Falling edge	53 µs ±0.5 µs (digitally filtered)
Modulation compared to ground potential	Max. ±38 V
Temperature sensor connection	
Quantity	1
Resistance range	500 Ω to 5 kΩ
Support	
Motion system	
mapp Motion	5.24.1 and higher
ACP10/ARNC0	5.24.1 and higher
Electrical properties	
Discharge capacitance	0.44 µF
Operating conditions	
Permissible mounting orientations	
Hanging vertically	Yes
Horizontal, face up	Yes
Standing horizontally	No
Installation elevation above sea level	
Nominal	0 to 500 m
Maximum [17]	4000 m
Pollution degree per EN 61800-5-1	2 (non-conductive pollution)
Overvoltage category per EN 61800-5-1	III
Degree of protection per EN 60529	IP20

Table 2: 8BVI0660HWS0.008-3 - Technical data

Order number	8BVI0660HWS0.008-3
Ambient conditions	
Temperature	
Operation	
Nominal	5 to 40°C
Maximum	55°C
Storage	-25 to 55°C
Transport	-25 to 70°C
Relative humidity	
Operation	5 to 85%
Storage	5 to 95%
Transport	Max. 95% at 40°C
Mechanical properties	
Dimensions [18]	
Width	213.5 mm
Height	317 mm
Depth	
Wall mounting	263 mm
Weight	Approx. 10.85 kg
Module width	4

Table 2: 8BVI0660HWS0.008-3 - Technical data

1) Achievable safety classifications (safety integrity level, safety category, performance level) are documented in the user's manual (section "Safety technology").
2) Valid under the following conditions: 750 VDC DC bus voltage, 5 kHz switching frequency, 40°C ambient temperature, installation elevation <500 m above sea level, no derating due to cooling type.
3) I_M ... Current on motor connection X5A [A_{eff}]
4) P_{SLOT1} ... Max. power consumption P_{8BAC} [W] of the plug-in module in SLOT1 (see the technical data for the respective plug-in module).
   P_{SLOT2} ... Max. power consumption P_{8BAC} [W] of the plug-in module in SLOT2 (see the technical data for the respective plug-in module).
   $P_{24\ V\ Out}$ ... Power [W] that is output to connections X2/+24 V Out 1 and X2/+24 V Out 2 on the module (max. 10 W).
5) Valid under the following conditions: 750 VDC DC bus voltage. The temperature specifications refer to the ambient temperature.
6) Value for the nominal switching frequency.
7) The module cannot supply the full continuous current at this switching frequency. This unusual value for the ambient temperature, at which derating of the continuous current must be taken into account, ensures that the derating of the continuous current can be determined in the same manner as at other switching frequencies.
8) B&R recommends operating the module at its nominal switching frequency. Operating the module at a higher switching frequency for application-specific reasons reduces the continuous current and increases CPU utilization.
9) If necessary, the stress of the motor isolation system can be reduced by an additional externally wired dv/dt choke. For example, the RWK 305 three-phase dv/dt choke from Schaffner (www.schaffner.com) can be used. IMPORTANT: Even when using a dv/dt choke, it is necessary to ensure that an EMC-compatible, low inductance shield connection is used!
10) Only applies when using B&R motor cables and B&R motors.
11) The module's electrical output frequency (SCTRL_SPEED_ACT * MOTOR_POLEPAIRS) is monitored to protect against dual use in accordance with Regulation (EC) 428/2009 | 3A225. If the electrical output frequency of the module exceeds the limit value of 598 Hz uninterrupted for more than 0.5 s, then the current movement is aborted and error 6060 is output ("Power unit: Limit speed exceeded").
12) The connection is made with cable lugs for M8 (0.32") threaded bolts. The nominal cross section of the cable lug must match the cross section of the conductor to be connected in the particular application.
13) The maximum diameter that can be clamped depends on the shield component set used.
14) During configuration, it is necessary to check if the minimum voltage can be maintained on the holding brake with the intended wiring. For the operating voltage range of the holding brake, see the user documentation for the motor being used.
15) The specified value is only valid under the following conditions:
   - The 24 VDC power supply for the module is provided by an 8B0C auxiliary supply module located on the same mounting plate.
   - Connection of connectors S1 and S2 (activation of the external holding brake) by a jumper with a maximum length of 10 cm.
   If the 24 VDC power supply for the module is applied to the mounting plate using an 8BVE expansion module, then the output voltage is reduced because of voltage drops on the expansion cable. In this case, undervoltage monitoring must be disabled.
   If jumpers longer than 10 cm are used to connect connectors S1 and S2, then the output voltage is reduced due to voltage drops on the jumpers.
16) Output signal switching device (OSSD) signals are used for monitoring signal lines for short circuits and cross faults.
17) Continuous operation at an installation elevation of 500 m to 4,000 m above sea level is possible taking the specified reduction of continuous current into account. Requirements that go beyond this must be arranged with B&R.
18) These dimensions refer to the actual device dimensions including the respective mounting plate. Additional spacing above and below the devices must be taken into account for mounting, connections and air circulation.

4 Overload characteristics

The continuous current for the module is permitted to be exceeded for a short time during operation (dynamic overload).

Overload response: WARNING

If the maximum overload time is exceeded, the module outputs a warning (WARNING).

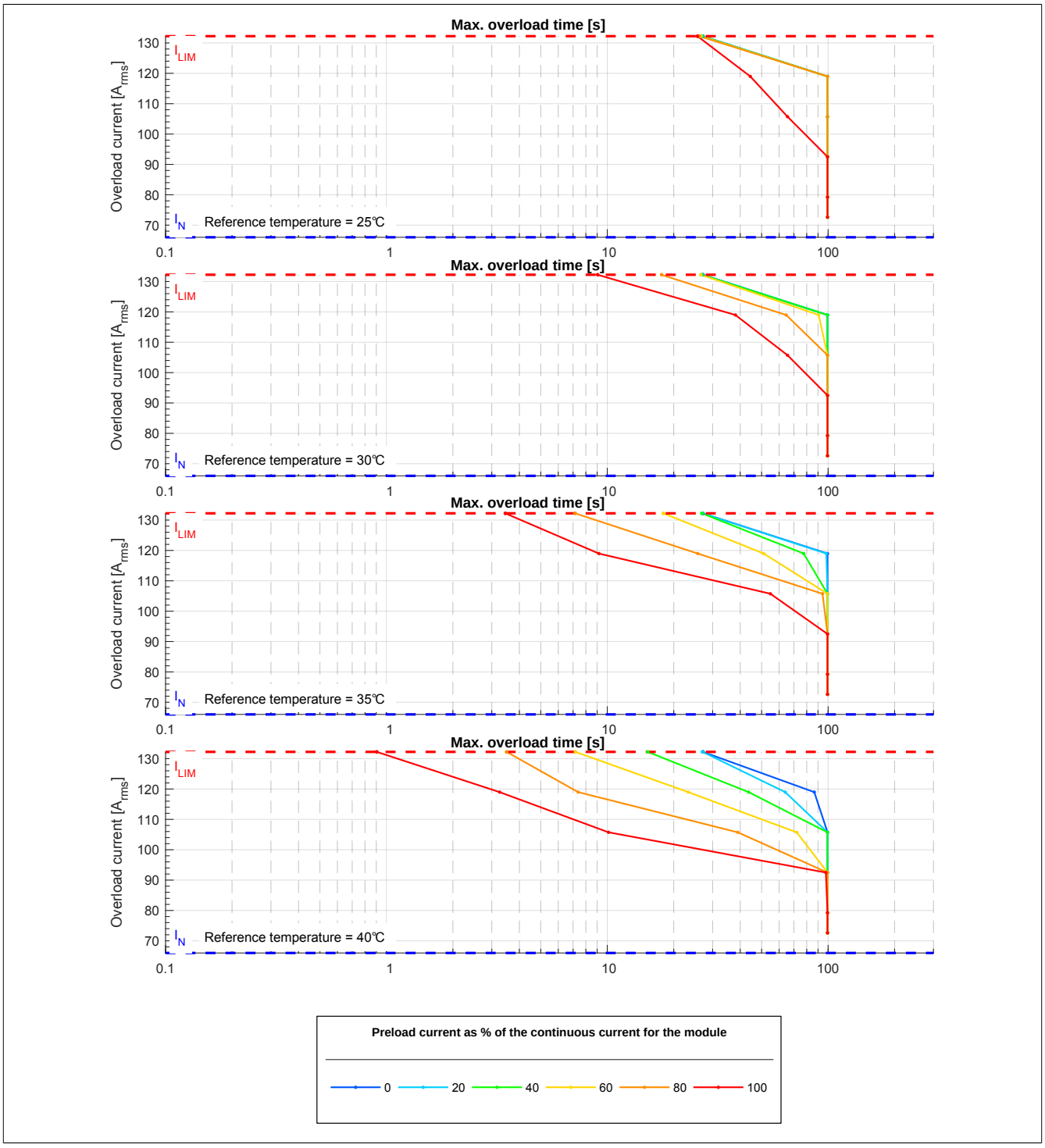

Figure 1: 8BVI0660HWSx.008-x - Overload characteristics, overload response - WARNING

I_N	Continuous current of the module [A_{rms}]
I_{LIM}	Peak current of the module [A_{rms}]
Mounting type:	Wall mounting
DC bus voltage:	750 V
Switching frequency:	5 kHz
Rotary frequency of current indicator:	20 Hz
Reference temperature:	Ambient temperature of the module

Overload response ERROR + STOP

When the module exceeds the maximum overload duration, it outputs an error and executes a movement stop with current limiting (ERROR + STOP).

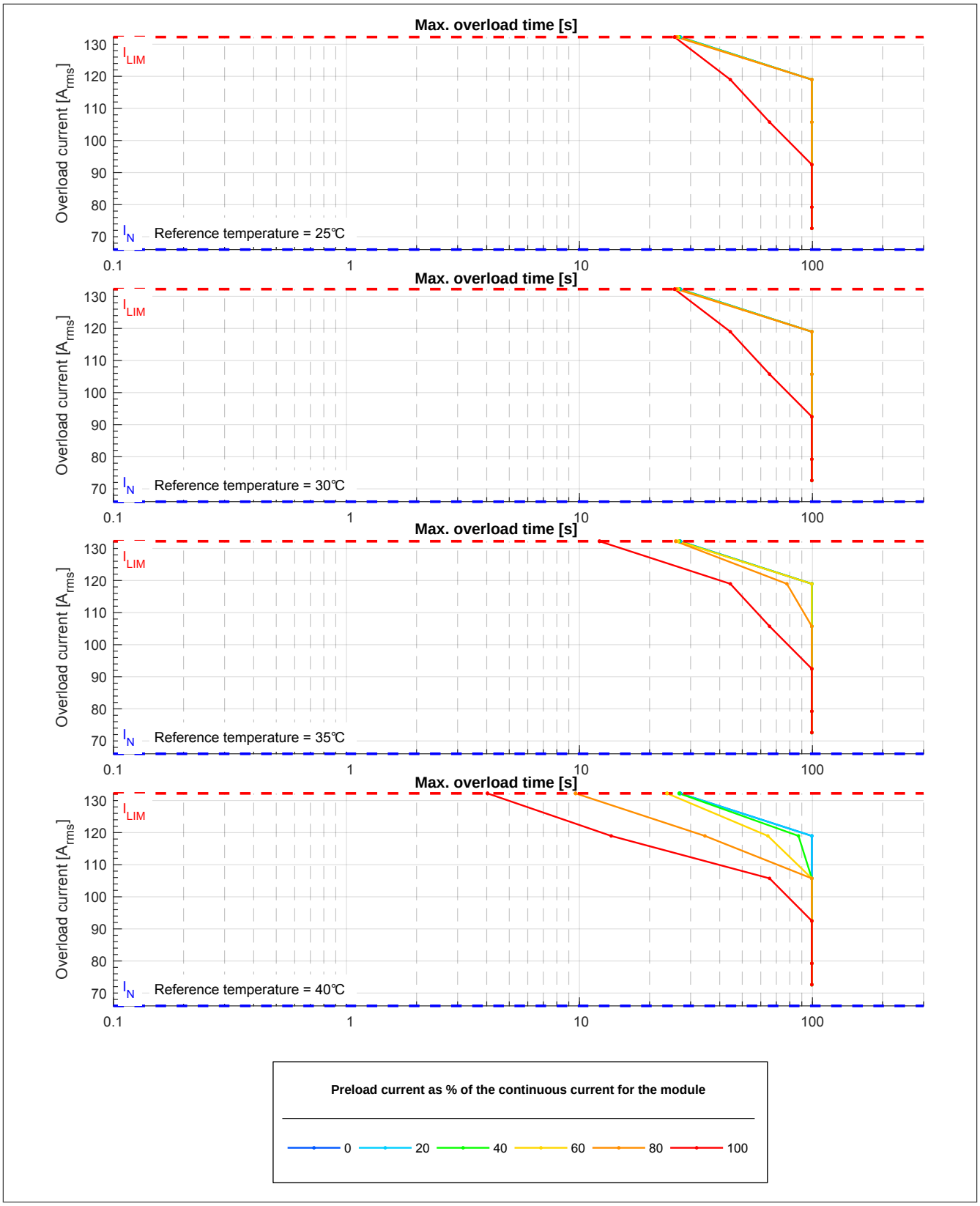

Figure 2: 8BVI0660HWSx.008-x - Overload characteristics, overload response - ERROR + STOP

I_N	Continuous current of the module [A_{rms}]
I_{LIM}	Peak current of the module [A_{rms}]
Mounting type:	Wall mounting
DC bus voltage:	750 V
Switching frequency:	5 kHz
Rotary frequency of current indicator:	20 Hz
Reference temperature:	Ambient temperature of the module

5 Status indicators

Status indicators are located on the black cover of each module.

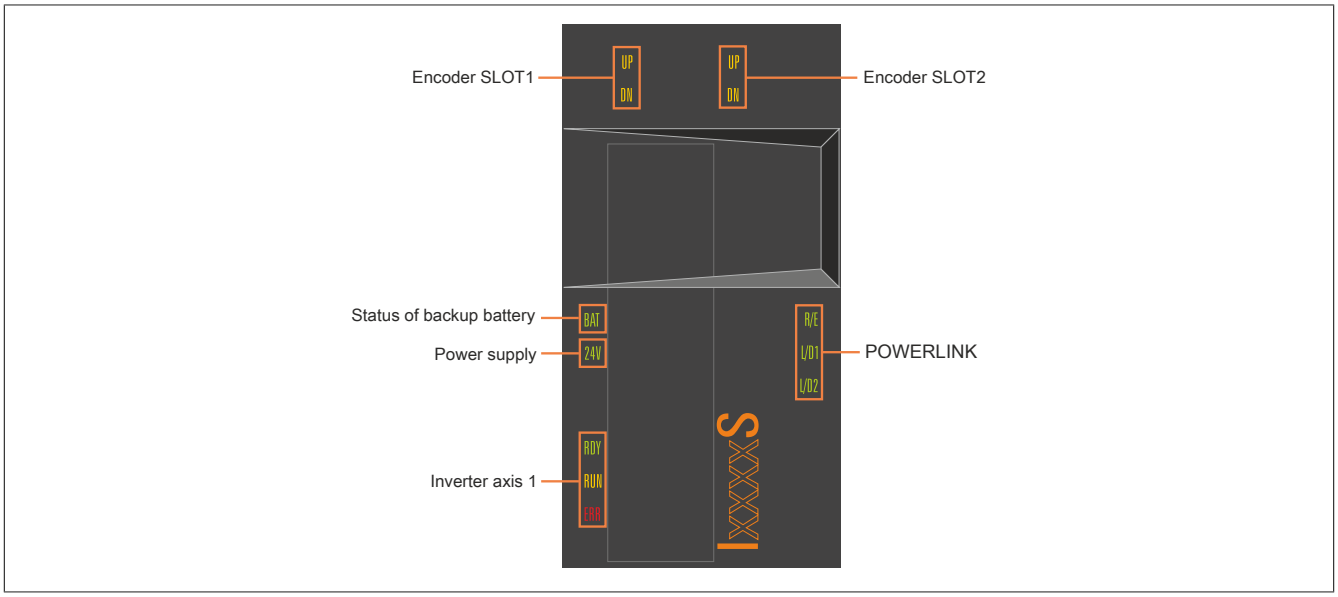

Figure 3: 8BVI inverter modules (1-axis modules) - Status indicator groups[1)]

5.1 LED status indicators

Status indicator group	Label	Color	Function	Description
POWERLINK	R/E	Green/Red	Ready/Error	see "POWERLINK - LED status indicators" on page 9
	L/D1	Green	Link/Data activity on port 1	
	L/D2	Green	Link/Data activity on port 2	
Inverter axis 1	RDY	Green	Ready	see "RDY, RUN, ERR (8BVI, 8BVP, 8B0P) - LED status indicators" on page 9
	RUN	Orange	Run	
	ERR	Red	Error	
Status of backup battery [1)]	BAT	Green/Red	Ready/Error	see "Backup battery - LED status indicators" on page 10
Power supply	24 V	Green	24 V OK	The 24 V module power supply voltage is within the tolerance range.
Encoder SLOT1	UP	Orange	Encoder direction of rotation +	The encoder position of the connected encoder is changing in the positive direction. The faster the encoder position changes, the brighter the LED lights up.
	DN	Orange	Encoder direction of rotation -	The encoder position of the connected encoder is changing in the negative direction. The faster the encoder position changes, the brighter the LED lights up.
Encoder SLOT2	UP	Orange	Encoder direction of rotation +	See encoder SLOT1.
	DN	Orange	Encoder direction of rotation -	

Table 3: 8BVI inverter modules (1-axis modules) - LED status indicators

1) Status indicator group "Backup battery status" is only available for modules with an integrated battery holder. Starting with a certain revision, the integrated battery holder is not included and using accessory kit 8BXB000.0000-00 (battery for encoder buffering) is no longer possible. For details, see the revision information of the respective module (www.br-automation.com).

1) Status indicator group "Backup battery status" is only available for modules with an integrated battery holder. Starting with a certain revision, the integrated battery holder is not included and using accessory kit 8BXB000.0000-00 (battery for encoder buffering) is no longer possible. For details, see the revision information of the respective module (www.br-automation.com).

5.2 RDY, RUN, ERR (8BVI, 8BVP, 8B0P) - LED status indicators

Label	Color	Function	Description	
RDY	Green	Ready	Solid green	The module is ready for operation and the power stage can be enabled (operating system present and booted, no pending permanent or temporary errors).
			Blinking green [1]	The module is not ready for operation. **Examples:** • No signal on one or both enable inputs • DC bus voltage outside the tolerance range • Overtemperature on the motor (temperature sensor) • Motor feedback not connected or defective • Motor temperature sensor not connected or defective • Overtemperature on the module (IGBT junction, heat sink, etc.) • Disturbance on network
RUN	Orange	Run	Solid orange	The module's power stage is enabled.
ERR	Red	Error	Solid red [1]	There is a permanent error on the module. **Examples:** • Permanent overcurrent • Data in EPROM not valid
			Blinking red	• LED status "Status changes when starting up the operating system loader" on page 10

Table 4: RDY, RUN, ERR (8BVI, 8BVP, 8B0P) - LED status indicators

1) Firmware V2.130 and later.

Information:

The ACOPOSmulti drive system has no way of detecting whether the module's internal fans are actually rotating.

5.3 POWERLINK - LED status indicators

Label	Color	Function	Description	
R/E	Green/Red	Ready/Error	LED off	The module is not supplied with power or network interface initialization has failed.
			Solid red	The POWERLINK node number of the module is 0.
			Blinking red/green	The client is in an error state (drops out of cyclic operation).
			Blinking green (1x)	The client detects a valid POWERLINK frame on the network.
			Blinking green (2x)	Cyclic operation on the network, but the client itself is not yet in cyclic operation.
			Blinking green (3x)	Cyclic operation of the client is in preparation.
			Solid green	The client is in cyclic operation.
			Flickering green	The client is not in cyclic operation and also does not detect any other stations on the network in cyclic operation.
L/D1	Green	Link/Data activity Port 1	Solid green	A physical connection has been established to another station on the network.
			Blinking green	Activity on port 1
L/D2	Green	Link/Data activity Port 2	Solid green	A physical connection has been established to another station on the network.
			Blinking green	Activity on port 2

Table 5: POWERLINK - LED status indicators

5.4 Backup battery - LED status indicators

Label	Color	Function	Description	
BAT[1)]	Green/Red	Ready/Error	LED off	**Possible causes:** • The voltage of the installed backup battery is within the tolerance range, but an EnDat encoder with battery backup is not connected. • An EnDat encoder with backup battery is connected and registering "Battery OK", but the module's firmware version does not support EnDat encoders with battery backup.
			Solid green	An EnDat encoder with battery backup is connected and registering "Battery OK" (voltage of the installed backup battery is within the tolerance range).
			Solid red	An EnDat encoder with battery backup is connected and registering "Battery not OK". **Possible causes:** • Voltage of the installed backup battery outside of tolerance range • No backup battery installed in module

Table 6: Backup battery - LED status indicators

1) Status indicator group "Backup battery status" is only available for modules with an integrated battery holder. Starting with a certain revision, the integrated battery holder is not included and using accessory kit 8BXB000.0000-00 (battery for encoder buffering) is no longer possible. For details, see the revision information of the respective module (www.br-automation.com).

5.5 Status changes when starting up the operating system loader

The following intervals are used for the LED status indicators:

Width of box: 50 ms
Repeats after: 3,000 ms

Status	LED	Display
1. Boot procedure for base hardware active	RDY	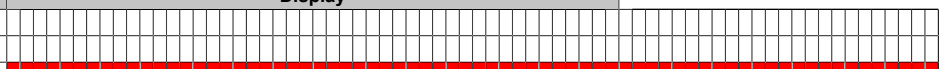
	RUN	
	ERR	
2. Network configuration active	RDY	
	RUN	
	ERR	
3. Waiting for network telegram	RDY	
	RUN	
	ERR	
4. Network communication active	RDY	
	RUN	
	ERR	
5. ACOPOS operating system being transferred/burned [1)]	RDY	
	RUN	
	ERR	

Table 7: Status changes when starting up the operating system loader

1) Firmware V2.140 and later.

5.6 POWERLINK node number setting Inverter modules

The POWERLINK node number can be set using the two hexadecimal coded rotary switches located behind the module's black cover.

<table>
<tr><th colspan="2">Figure</th><th>Coded rotary switches</th><th>POWERLINK node number</th></tr>
<tr><td rowspan="3">
Cover closed</td><td rowspan="3">
Cover open</td><td>1</td><td>16s position (high)</td></tr>
<tr><td>2</td><td>1s position (low)</td></tr>
<tr><td colspan="2">A change to the POWERLINK node number only takes effect the next time the ACOPOSmulti drive system is switched on.

Information:

In principle, node numbers between $01 and $FD are permitted.
However, node numbers between $F0 and $FD are intended for future system expansions. To ensure compatibility, these node numbers should be avoided.

Node numbers $00, $FE and $FF are reserved and are therefore not permitted to be set.</td></tr>
</table>

Table 8: Setting the POWERLINK node number

6 Dimension diagram and installation dimensions

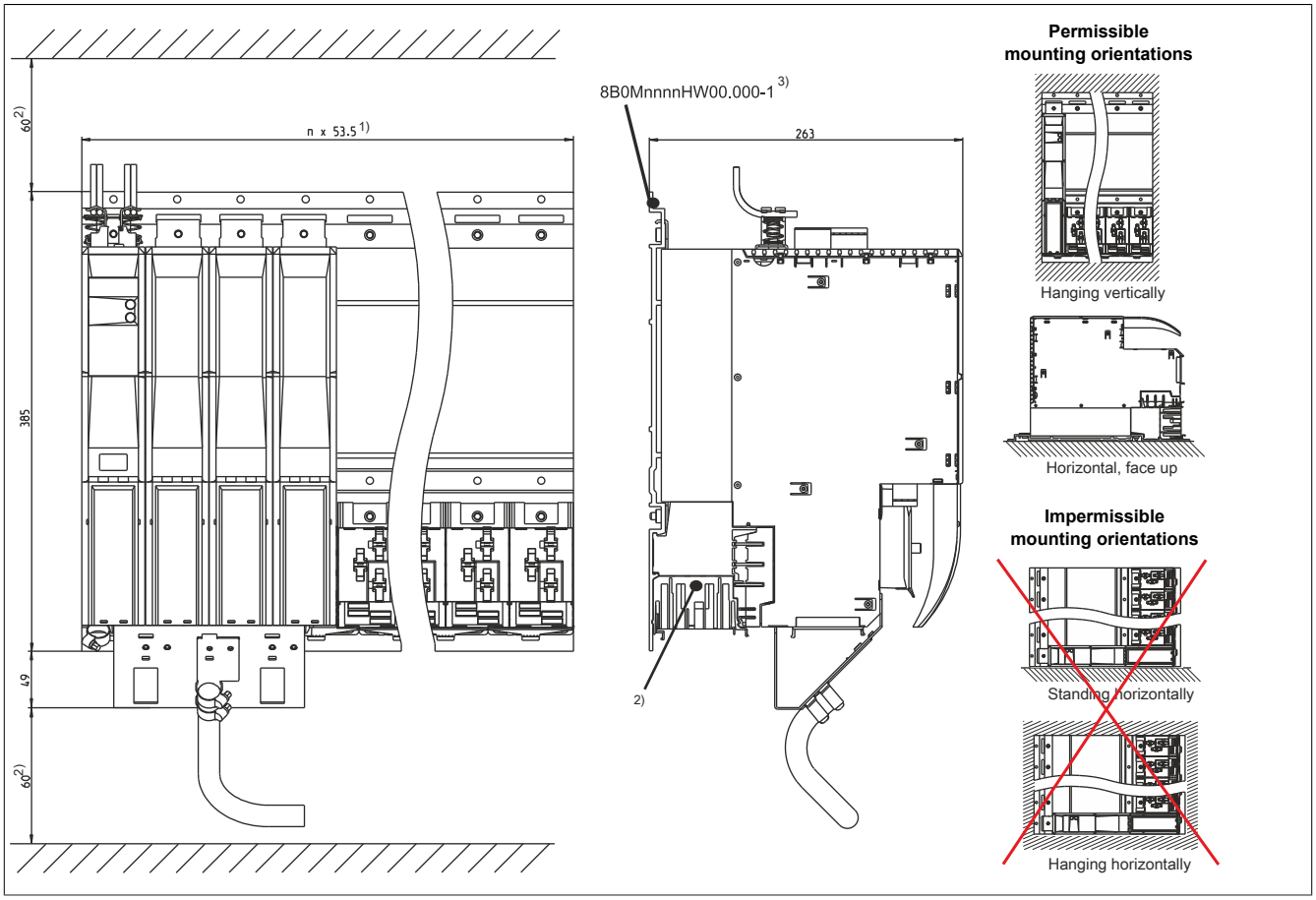

Figure 4: Dimension diagram and installation dimensions

1) n... Number of width units on the mounting plate
2) For sufficient air circulation, a clearance of at least 60 mm must be provided above the mounting plate and below the module.
To ensure that the fan modules in the mounting plate can be replaced easily, at least 250 mm clearance must be available below the module.
3) nnnn indicates the number of slots (e.g. 0160 refers to 16 slots).

7 Wiring

7.1 Pinout overview

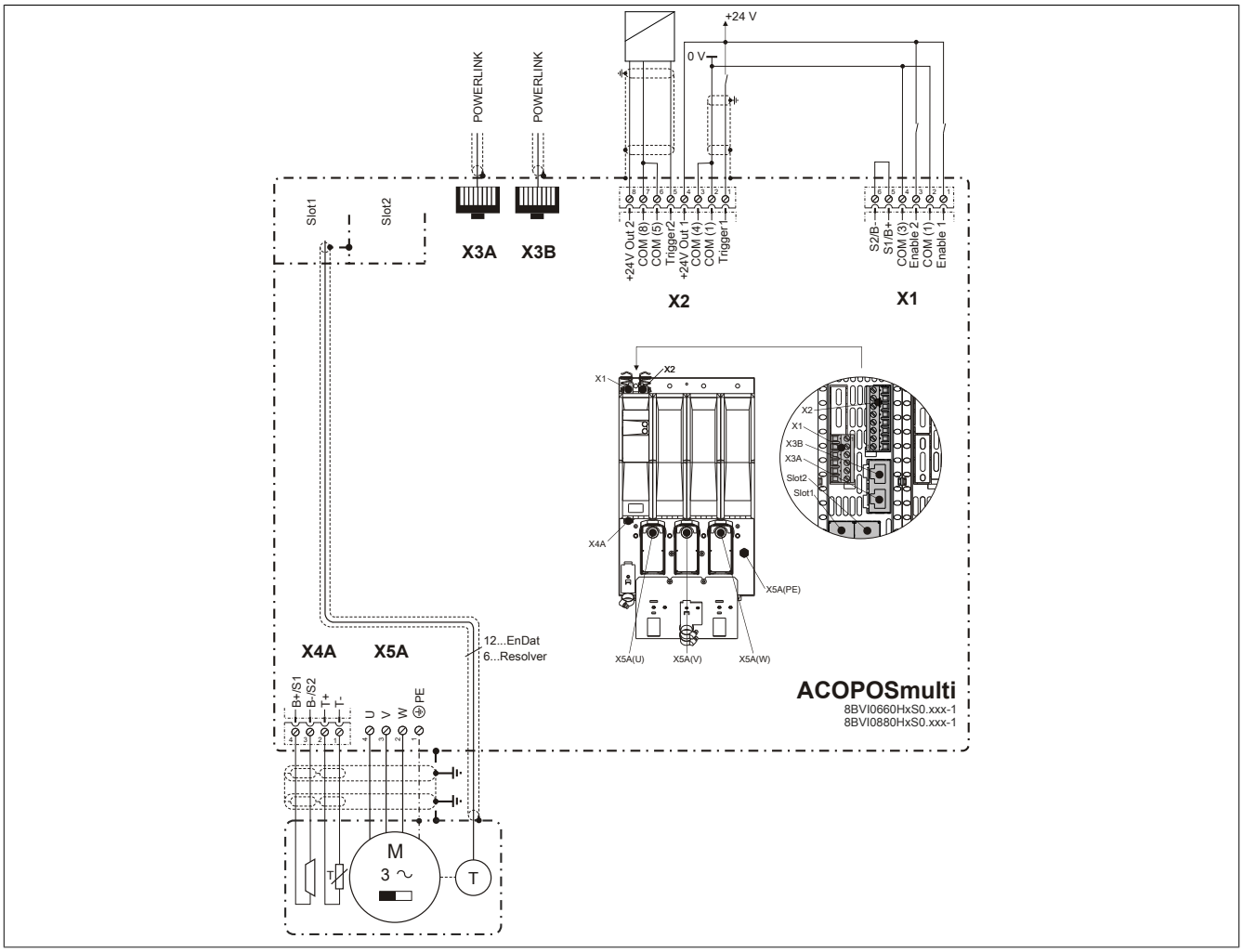

Figure 5: Pinout overview

7.2 Connector X1 - Pinout

X1	Pin	Description	Function
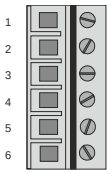 8TB2106.2010-00	1	Enable 1 [1]	Axis 1: Enable 1
	2	COM (1)	Axis 1: Enable 1 0 V
	3	Enable 2 [1]	Axis 1: Enable 2
	4	COM (3)	Axis 1: Enable 2 0 V
	5	S1/B+ [2]	Axis 1: Brake + / Activation of the external holding brake
	6	S2/B- [2]	Axis 1: Brake - / Activation of the external holding brake

Table 9: Connector X1 - Pinout

1) Wiring is not permitted to exceed a total length of 30 m.
2) If the connection is used to activate the external holding brake (S1/S2), then the wiring is not permitted to exceed a total length of 3 m.
If the holding brake is connected via an additional external relay contact (ground-in e.g. via connections S1/S2) instead of only via the internal transistor, then the internal quenching circuit has no effect! In this case, the customer must make sure that neither the relay contact nor the braking coil are damaged when switching off the brake. This can be done by interconnecting the coil or - better still - interconnecting the contact with a quenching circuit.

Danger!

The connections for the motor temperature sensors and the motor holding brake are safely isolated circuits. As a result, only devices or components that have at least safe isolation per IEC 60364-4-41 or EN 61800-5-1 are permitted to be connected to these connections.

Caution!

If B+ and B- are swapped when connecting the permanent magnet holding brakes, then the brakes cannot be opened! ACOPOSmulti inverter modules cannot determine if a holding brake is connected with reverse polarity!

7.2.1 Wiring the connections for the motor holding brake

Activation of the motor holding brake internally by the ACOPOSmulti inverter module

Holding brake connected to connector X4A	Holding brake connected to connector X1	Description
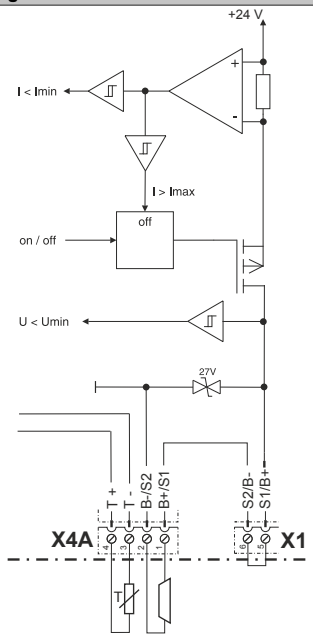 **Information:** **A jumper must be placed between connections S1/B+ and S2/B- on connector X1.**	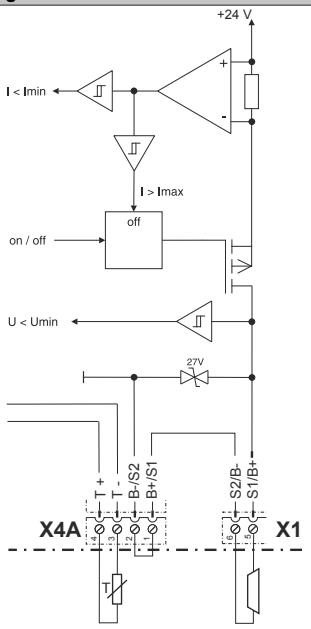 **Information:** **A jumper must be placed between connections B+/S1 and B-/S2 on connector X4A.**	• **Power supply:** Internally by ACOPOSmulti inverter module • **Enabling:** Internally by ACOPOSmulti inverter module • **Monitoring:** Internally by ACOPOSmulti inverter module

Table 10: Activation of the motor holding brake internally

Activation of the motor holding brake internally by the ACOPOSmulti inverter module and/or externally by dry contacts

Holding brake connected to connector X4A	Holding brake connected to connector X1	Description
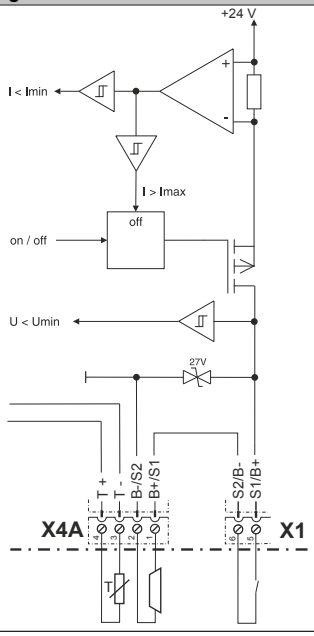	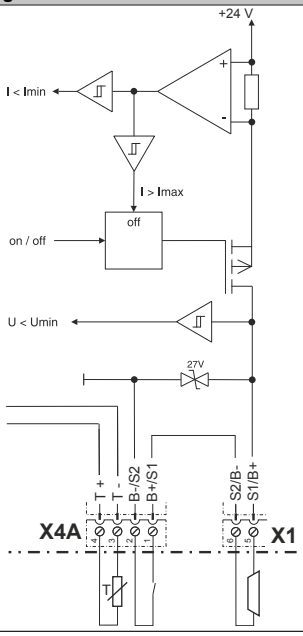	• **Power supply:** Internally by ACOPOSmulti inverter module • **Enabling:** Internally by the ACOPOSmulti inverter module and/or externally by dry contacts[1)] • **Monitoring:** Internally by ACOPOSmulti inverter module **Information:** **Internal monitoring by the ACOPOSmulti inverter module must be configured according to the requirements of the application.[2)]**

Table 11: Activation of the motor holding brake internally and/or externally

1) Activation of the holding brake via external safety circuits is thus possible independently of the control integrated in the ACOPOSmulti inverter.
2) Configuration takes place using ParID 90 (1 ... Internal monitoring active, 5 ... Internal monitoring not active).

7.3 Connector X2 - Pinout

X2	Pin	Name	Function
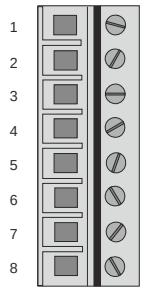 8TB2108.2010-00	1	Trigger 1	Trigger 1
	2	COM (1)	Trigger 1 0 V
	3	COM (2)	+24 V output 1 0 V
	4	+24 V Out 1	+24 V output 1
	5	Trigger 2	Trigger 2
	6	COM (5)	Trigger 2 0 V
	7	COM (8)	+24 V output 2 0 V
	8	+24 V Out 2	+24 V output 2

Table 12: Connector X2 - Pinout

7.4 Connectors X3A, X3B - Pinout

X3A, X3B	Pin	Name	Function
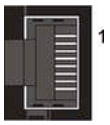	1	RXD	Receive signal
	2	RXD\	Receive signal inverted
	3	TXD	Transmit signal
	4	Shield	Shield
	5	Shield	Shield
	6	TXD\	Transmit signal inverted
	7	Shield	Shield
	8	Shield	Shield

Table 13: X3A, X3B connectors - Pinout

7.5 Connector X4A - Pinout

X4A	Description	Function
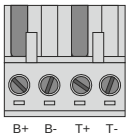 8TB2104.203L-00	T-	Axis 1: Temperature sensor -
	T+	Axis 1: Temperature sensor +
	B-/S2 1)	Axis 1: Brake - / Activation of the external holding brake
	B+/S1 1)	Axis 1: Brake + / Activation of the external holding brake

Table 14: Connector X4A - Pinout

1) If the connection is used to activate the external holding brake (S1/S2), then the wiring is not permitted to exceed a total length of 3 m.
If the holding brake is connected via an additional external relay contact (ground-in e.g. via connections S1/S2) instead of only via the internal transistor, then the internal quenching circuit has no effect! In this case, the customer must make sure that neither the relay contact nor the braking coil are damaged when switching off the brake. This can be done by interconnecting the coil or - better still - interconnecting the contact with a quenching circuit.

Danger!

The connections for the motor temperature sensors and the motor holding brake are safely isolated circuits. As a result, only devices or components that have at least safe isolation per IEC 60364-4-41 or EN 61800-5-1 are permitted to be connected to these connections.

Caution!

If B+ and B- are swapped when connecting the permanent magnet holding brakes, then the brakes cannot be opened! ACOPOSmulti inverter modules cannot determine if a holding brake is connected with reverse polarity!

7.5.1 Wiring the connections for the motor holding brake

Activation of the motor holding brake internally by the ACOPOSmulti inverter module

Holding brake connected to connector X4A	Holding brake connected to connector X1	Description
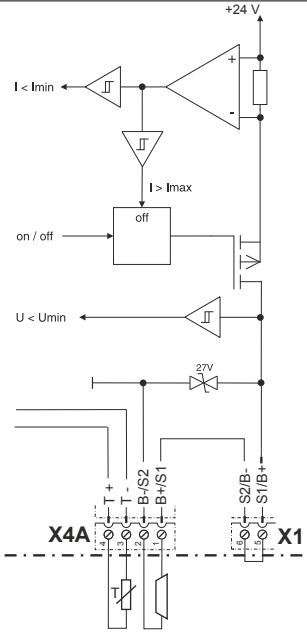 **Information:** **A jumper must be placed between connections S1/B+ and S2/B- on connector X1.**	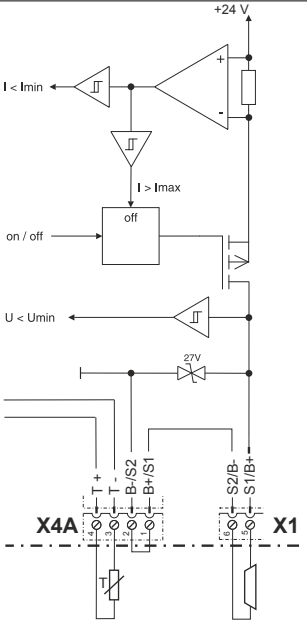 **Information:** **A jumper must be placed between connections B+/S1 and B-/S2 on connector X4A.**	• **Power supply:** Internally by ACOPOSmulti inverter module • **Enabling:** Internally by ACOPOSmulti inverter module • **Monitoring:** Internally by ACOPOSmulti inverter module

Table 15: Activation of the motor holding brake internally

Activation of the motor holding brake internally by the ACOPOSmulti inverter module and/or externally by dry contacts

Holding brake connected to connector X4A	Holding brake connected to connector X1	Description
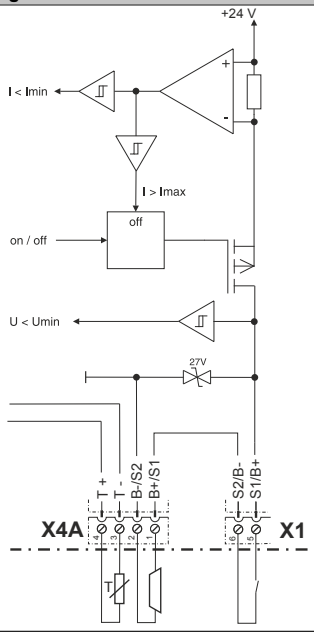	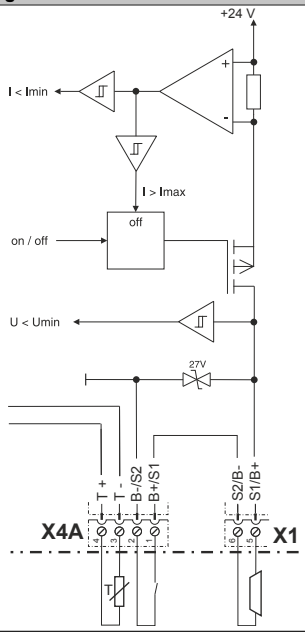	• **Power supply:** Internally by ACOPOSmulti inverter module • **Enabling:** Internally by the ACOPOSmulti inverter module and/or externally by dry contacts[1)] • **Monitoring:** Internally by ACOPOSmulti inverter module **Information:** **Internal monitoring by the ACOPOSmulti inverter module must be configured according to the requirements of the application.[2)]**

Table 16: Activation of the motor holding brake internally and/or externally

1) Activation of the holding brake via external safety circuits is thus possible independently of the control integrated in the ACOPOSmulti inverter.
2) Configuration takes place using ParID 90 (1 ... Internal monitoring active, 5 ... Internal monitoring not active).

7.6 X5A - Pinout

X5A	Pin	Description	Function
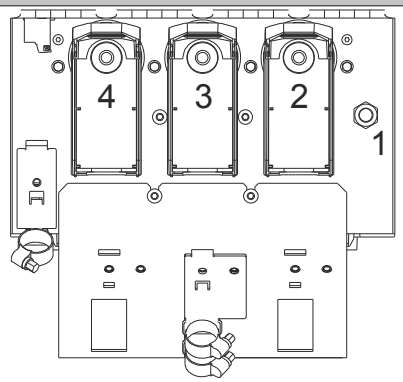	1	PE	Axis 1: Protective ground conductor
	2	W	Axis 1: Motor connection W
	3	V	Axis 1: Motor connection V
	4	U	Axis 1: Motor connection U
Tightening torque for the M8 nuts: 12 Nm			

Table 17: X5A - Pinout

Motor connections U, V, W - Cable installation

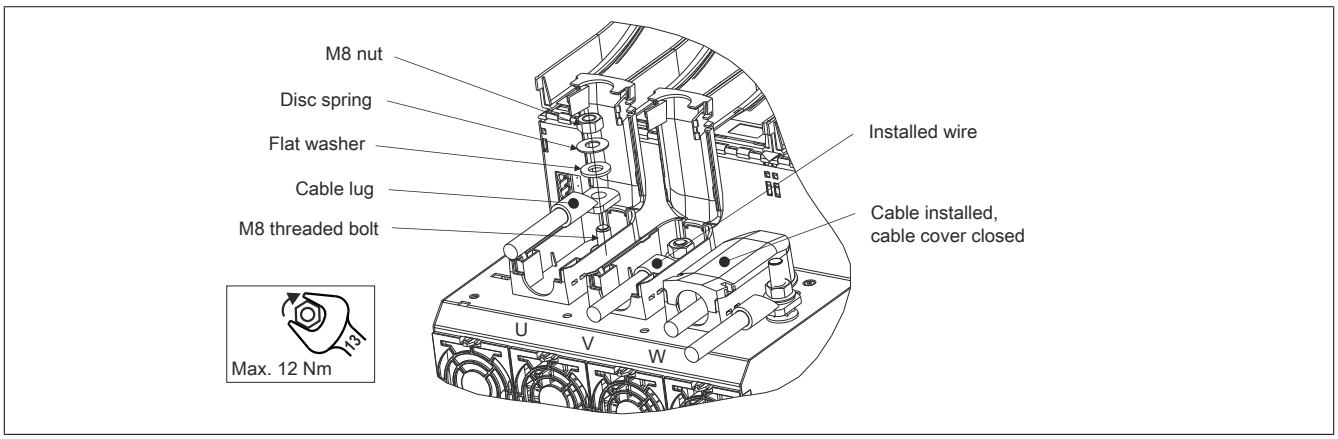

Figure 6: Motor connections U, V, W - Cable installation

PE connection (1-wire) - Cable installation

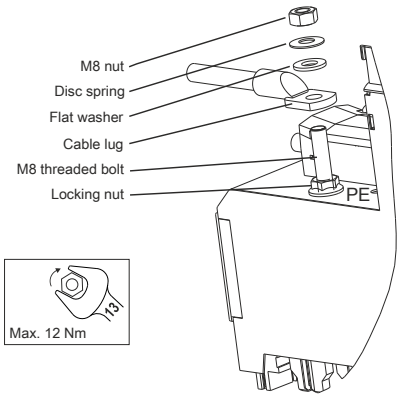

PE connection (1-wire) - Overview of installation material

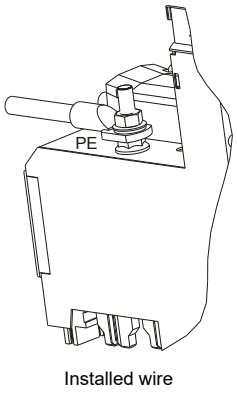

Installed wire

Table 18: PE connection (1-wire) - Cable installation

PE connection (3-wire) - Cable installation

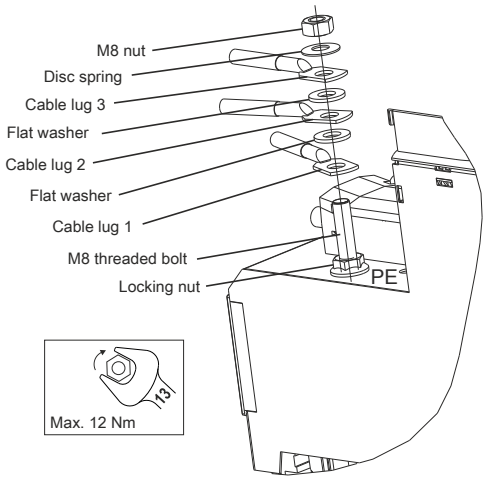

PE connection (3-wire) - Overview of installation material

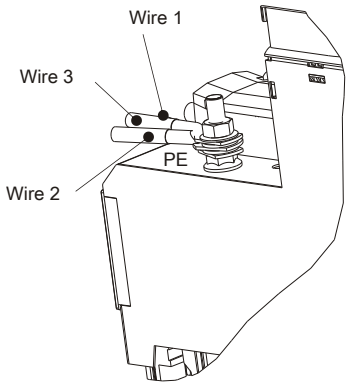

Installed wire

Table 19: PE connection (3-wire) - Cable installation

7.7 Input/Output circuit diagram

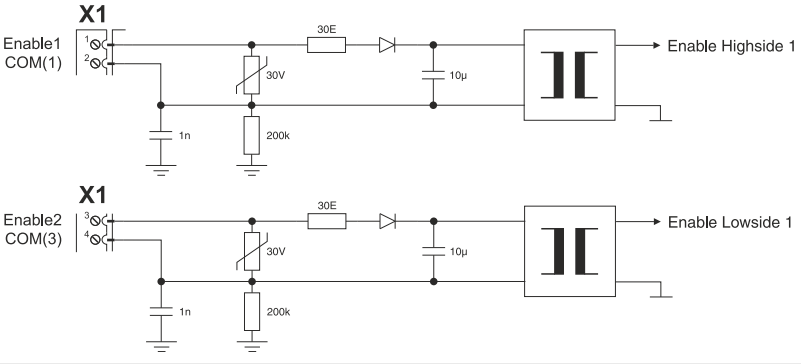

Figure 7: Enable

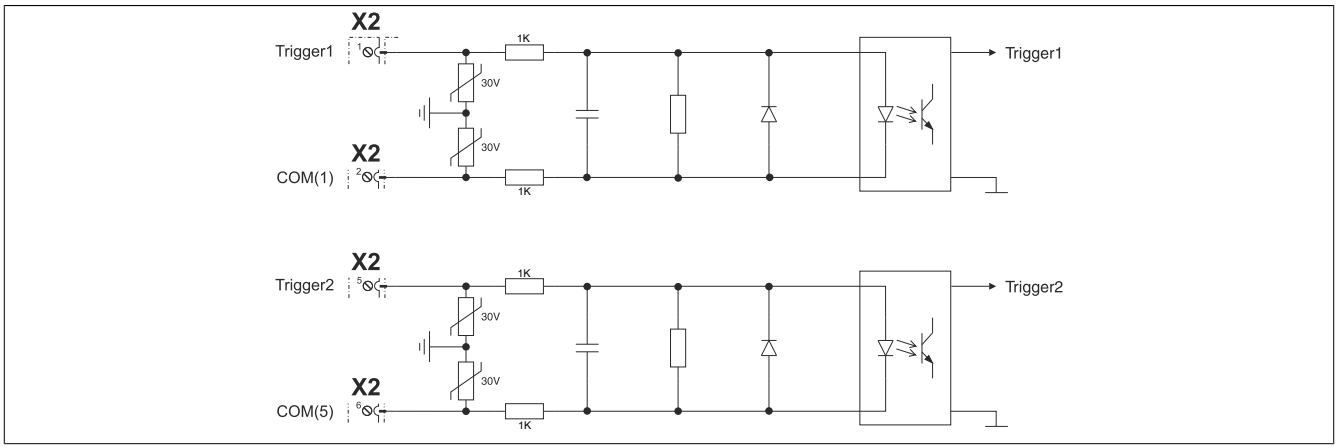

Figure 8: Trigger inputs

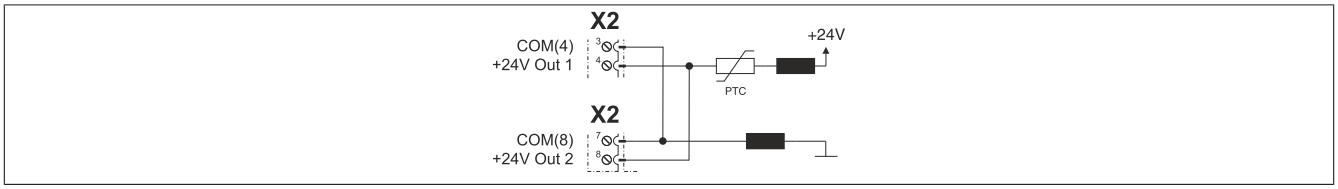

Figure 9: 24 VDC out

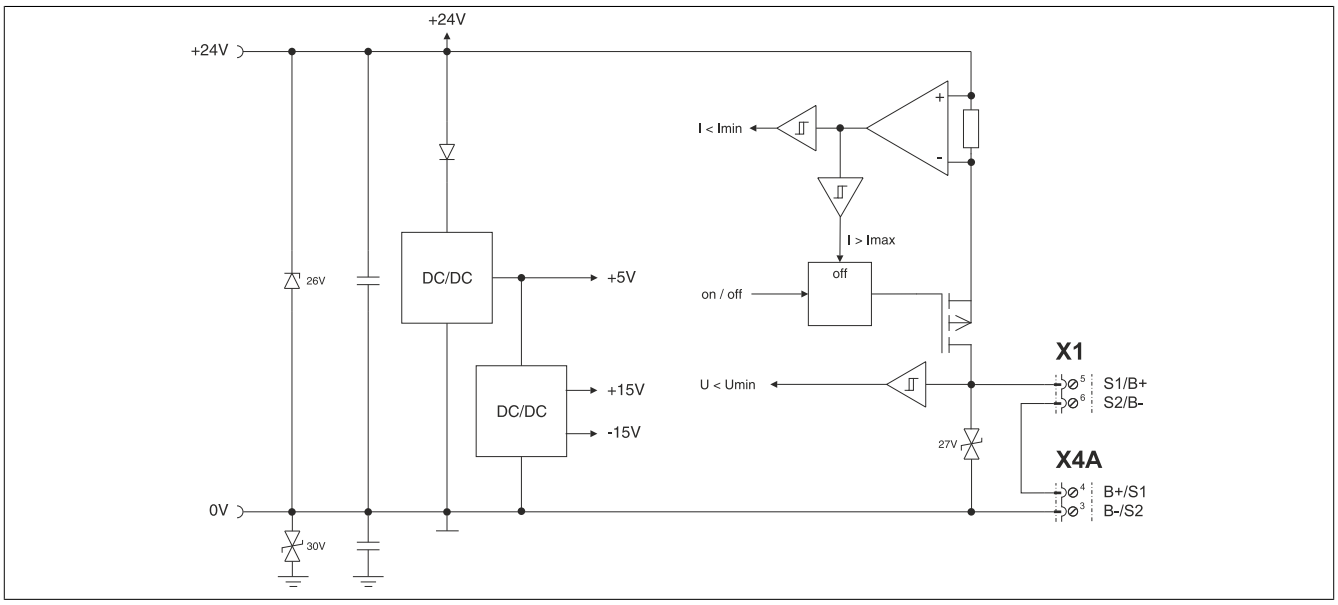

Figure 10: Holding brake

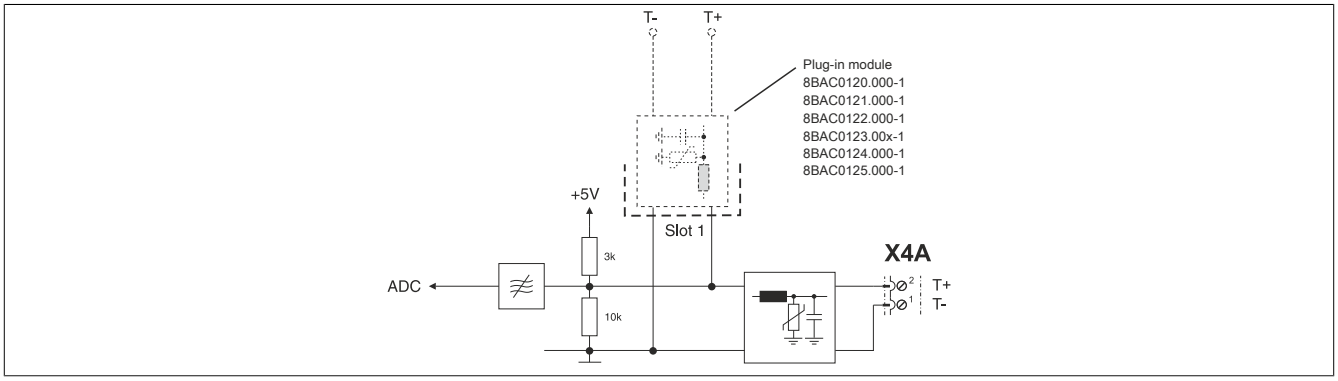

Figure 11: Temperature sensor

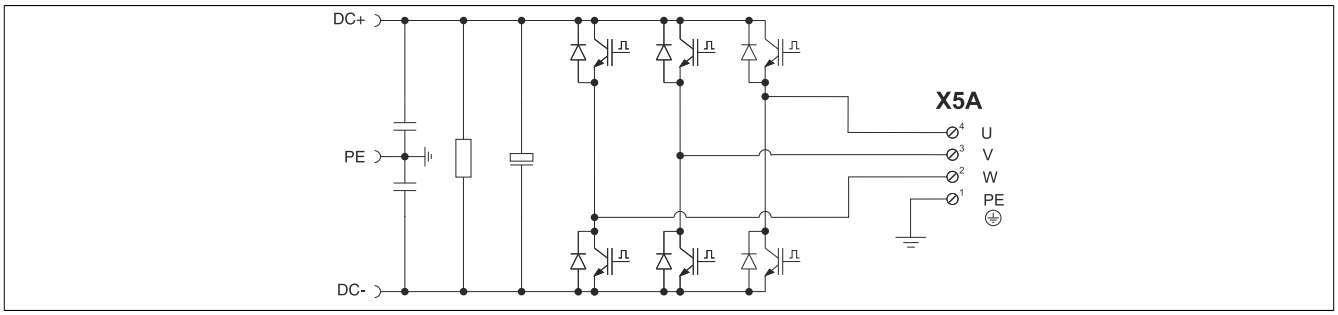

Figure 12: Motor