# E30131

## Screw-in adapter for process sensors

ADAPT G1 / G1/2 A DIN EN 837-3

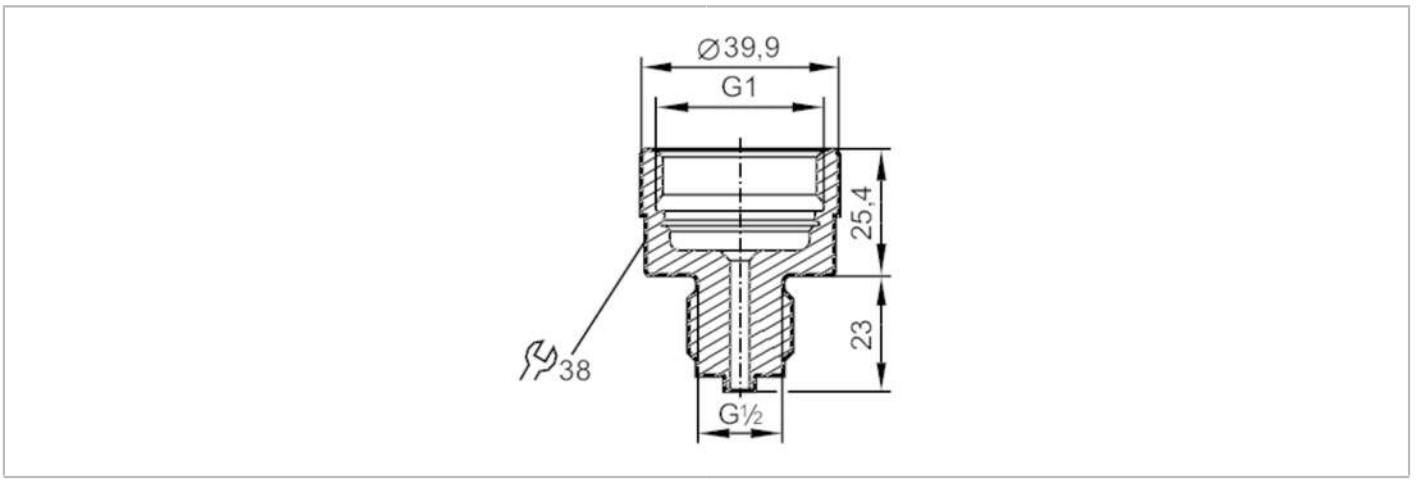


ACS Reg31

| | | |
|---|---|---|
| **Application** | | |
| Pressure rating | [bar] | 100 |
| **Tests / approvals** | | |
| Pressure Equipment Directive | | A possible classification to PED depends on the application and has to be carried out by the user / operator. |
| Pressure Equipment Directive EAC | | The adapter is intended for use in devices, machines and installations that do not fall under the categories of the technical rule TR CU 032/2013. |
| Safety instructions | | The compatibility between medium and product material has to be checked in all applications. |
| **Mechanical data** | | |
| Weight | [g] | 192 |
| Materials | | stainless steel (1.4404 / 316L) |
| Sensor connection | | G 1 Aseptoflex Vario |
| Process connection | | threaded connection G 1/2 |
| **Accessories** | | |
| Items supplied | | O-rings: 1 x 24 x 2, EPDM, FDA compliant |
| Accessories (optional) | | O-ring: 1 x 24 x 2, FKM, FDA compliant, E30123 |
| **Remarks** | | |
| Pack quantity | | 1 pcs. |