HYGIECODE - Coded Non Contact **Type: MMC-H**

FEATURES:

Compact and robust fitting suitable for all small guard applications
Through hole fixing to enable front mounting
No food trap areas
Suitable for CIP SIP cleaning -
Food Contact or Splash Zones EHEDG guidelines
LED indication
Cost-effective interlock solution
Wide sensing at 10mm
Can be mounted unobtrusively in channels or behind doors
Left or right cable exit options available
Up to: PLe ISO13849-1
2NC 1NO circuits - high switching life - no moving parts
Stainless Steel 316 housing - mirror polished finished to Ra4

Stainless Steel 316 Housing mirror polished (Ra4)
Coded Magnetic Actuation
Switching Tolerance up to 10mm
Will operate with most Safety Relays



DIMENSIONS:

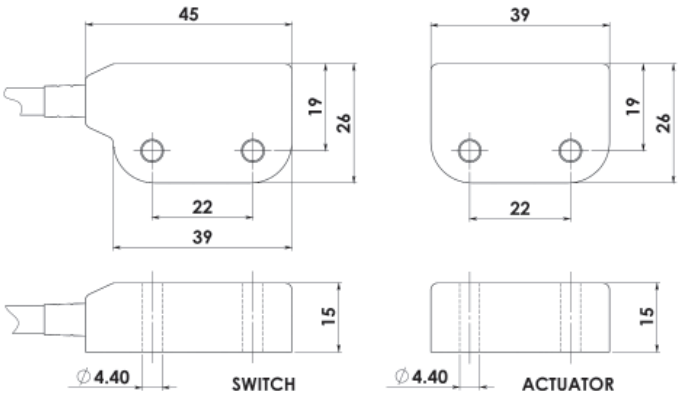

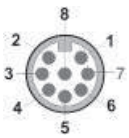

Quick Connect M12 versions fitted with 250mm (10") cable

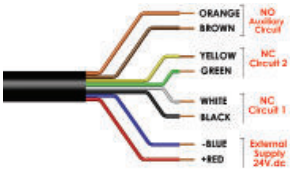

Quick Connect QC M12 8 Way Male Plug Pin view from Switch	Flying Lead Colour	Circuit (Actuator Present)	Output Types Solid State
8	Orange	Auxiliary NO or NC	200mA Max. 24Vdc
5	Brown	Auxiliary NO or NC	
4	Yellow	Safety NC2 +ve	200mA Max. 24Vdc
6	Green	Safety NC2 -ve	
7	Black	Safety NC1 +ve	200mA Max. 24Vdc
1	White	Safety NC1 -ve	
2	Red	Supply +24Vdc	Supply 24Vdc +/- 10%
3	Blue	Supply 0Vdc	

Left or Right Cable Exit Options available

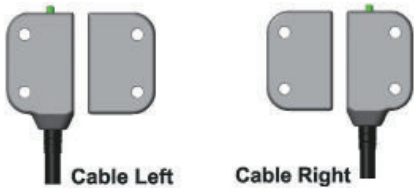



140101	Female QC Lead	M12 Female 5m. 8 way
140102	Female QC Lead	M12 Female 10m. 8 way

Standards: ISO14119 EN60947-5-1
EN60204-1 ISO13849-1 EN62061 UL508

Safety Classification and Reliability Data:

ISO13849-1	Up to PLe Category 4
EN62061	Up to SIL3
PFHd	8.71 x 10^{-11}
Proof Test Interval (Life)	20 years
MTTFd	866 years
Safety Channel 1 NC	24Vdc 0.2A Max. Rating
Safety Channel 2 NC	24Vdc 0.2A Max. Rating
Safety Channel 3 NO	24Vdc 0.2A Max. Rating
Minimum Switched Current	10Vdc 1mA
Dielectric Withstand	250Vac
Insulation Resistance	100 Mohms
Recommended Setting Gap	5mm
Switching Distance	Sao 8mm Close
(Target to Target)	Sar 12mm Open
Tolerance to Misalignment	5mm in any direction from 5mm setting gap
Switching Frequency	1.0Hz maximum
Approach Speed	200mm/min to 1000mm/sec
Body Material	Stainless Steel 316 Mirror Polished Finish (Ra4)
Operating Temperature	-25C +105C (CIP SIP cleaning)
Enclosure Protection	IP69K IP67
Shock Resistance	IEC68-2-27 11ms 30g
Vibration Resistance	IEC68-2-6 10-55Hz 1mm
Cable Type	PVC 6 or 8 core 6mm OD Conductors 0.25mm^2
Mounting Bolts	2xM4 Tightening torque 1.0Nm
Mounting Position	Any

For all IDEM switches the normally closed (NC) circuits are closed when the guard is closed and the actuator is present.

SALES NUMBER	TYPE	CABLE LENGTH	CIRCUITS
131101	MMC-H Cable Right	2M	2NC
131102	MMC-H Cable Right	5M	2NC
131103	MMC-H Cable Right	10M	2NC
131104	MMC-H Cable Right	QC-M12*	2NC
131105	MMC-H Cable Right	2M	2NC 1NO
131106	MMC-H Cable Right	5M	2NC 1NO
131107	MMC-H Cable Right	10M	2NC 1NO
131108	MMC-H Cable Right	QC-M12*	2NC 1NO
131109	MMC-H Cable Right	2M	3NC
131110	MMC-H Cable Right	5M	3NC
131111	MMC-H Cable Right	10M	3NC
131112	MMC-H Cable Left	QC-M12*	3NC
131113	MMC-H Cable Left	2M	2NC
131114	MMC-H Cable Left	5M	2NC
131115	MMC-H Cable Left	10M	2NC
131116	MMC-H Cable Left	QC-M12*	2NC
131117	MMC-H Cable Left	2M	2NC 1NO
131118	MMC-H Cable Left	5M	2NC 1NO
131119	MMC-H Cable Left	10M	2NC 1NO
131120	MMC-H Cable Left	QC-M12*	2NC 1NO
131121	MMC-H Cable Left	2M	3NC
131122	MMC-H Cable Left	5M	3NC
131123	MMC-H Cable Left	10M	3NC
131124	MMC-H Cable Left	QC-M12*	3NC

*Other QC (Quick Connect) sizes available upon request.

Note: 2NC 1NO versions have 2NC Safety and 1NO Auxiliary Circuits
3NC versions have 2NC Safety and 1NC Auxiliary Circuits
AVAILABLE WITHOUT LED IF REQUIRED.