

Model Number

UB250-F77-E2-V31

Ultrasonic direct detection sensor

Features

- **Miniature design**
- **Program input**
- **Degree of protection IP67**
- **Switching status indicator, yellow LED**

Diagrams

Characteristic response curve

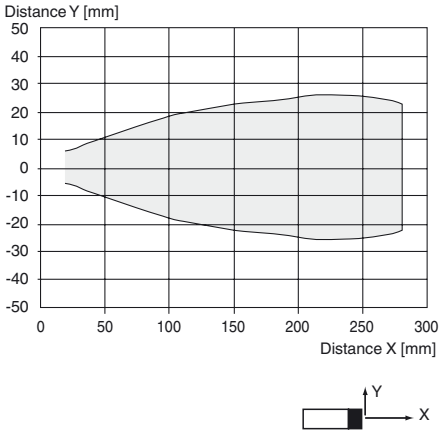

Technical data

General specifications	
Sensing range	20 ... 250 mm
Adjustment range	45 ... 250 mm
Unusable area	0 ... 20 mm
Standard target plate	20 mm x 20 mm
Transducer frequency	approx. 400 kHz
Nominal ratings	
Time delay before availability t_v	≤ 150 ms
Limit data	
Permissible cable length	max. 300 m
Indicators/operating means	
LED yellow	switching state and flashing: Teach-In
Electrical specifications	
Rated operating voltage U_e	24 V DC
Operating voltage U_B	20 ... 30 V DC , ripple 10 %$_{SS}$; 12 ... 20 V DC sensitivity reduced to 90 %
No-load supply current I_0	≤ 20 mA
Input	
Input type	1 program input
Level	low level : 0 ... 0.7 V (Teach-In active) high level : U_B or open input (Teach-In inactive)
Input impedance	16 kΩ
Pulse length	≥ 3 s
Output	
Output type	1 switch output PNP, NO
Rated operating current I_e	200 mA , short-circuit/overload protected
Voltage drop U_d	≤ 2 V
Switch-on delay t_{on}	≤ 50 ms
Repeat accuracy	± 1 mm
Switching frequency f	10 Hz
Range hysteresis H	typ. 2.5 mm
Off-state current I_r	≤ 0.01 mA
Temperature influence	+ 0.17 %/K
Ambient conditions	
Ambient temperature	-25 ... 70 °C (-13 ... 158 °F)
Storage temperature	-40 ... 85 °C (-40 ... 185 °F)
Shock resistance	30 g , 11 ms period
Vibration resistance	10 ... 55 Hz , Amplitude ± 1 mm
Mechanical specifications	
Connection type	M8 x 1 connector , 4-pin
Degree of protection	IP67
Material	
Housing	Polycarbonate
Transducer	epoxy resin/hollow glass sphere mixture; polyurethane foam
Installation position	any position
Mass	10 g
Tightening torque, fastening screws	max. 0.2 Nm
Compliance with standards and directives	
Standard conformity	
Standards	EN 60947-5-2:2007 IEC 60947-5-2:2007
Approvals and certificates	
UL approval	cULus Listed, General Purpose
CSA approval	cCSAus Listed, General Purpose
CCC approval	CCC approval / marking not required for products rated ≤36 V

Release date: 2012-04-11 15:29 Date of issue: 2014-05-15 233250_eng.xml

Dimensions

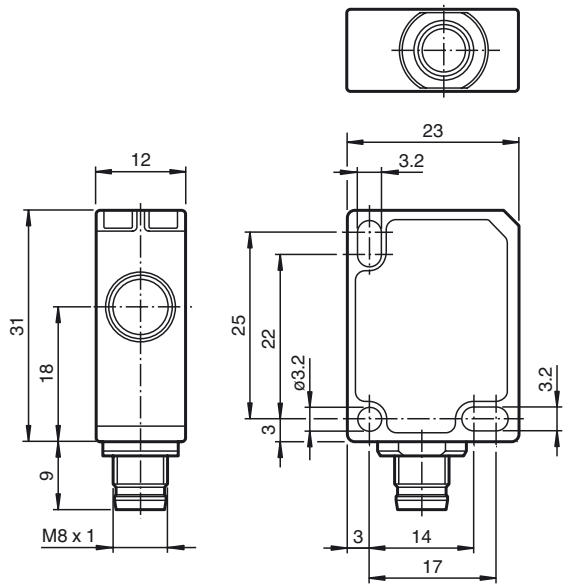

Electrical Connection

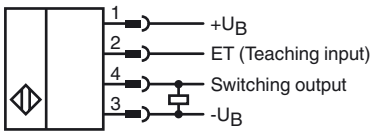

Pinout



Wire colors in accordance with EN 60947-5-2

1	BN	(brown)
2	WH	(white)
3	BU	(blue)
4	BK	(black)

Release date: 2012-04-11 15:29 Date of issue: 2014-05-15 233250_eng.xml

Refer to “General Notes Relating to Pepperl+Fuchs Product Information”.
Pepperl+Fuchs Group www.pepperl-fuchs.com
USA: +1 330 486 0001 fa-info@us.pepperl-fuchs.com
Germany: +49 621 776 4411 fa-info@de.pepperl-fuchs.com
Singapore: +65 6779 9091 fa-info@sg.pepperl-fuchs.com
PEPPERL+FUCHS SENSING YOUR NEEDS

Accessories

UB-PROG4-V31
Programming unit for ultrasonic sensors with Teach-in input at pin 2

OMH-ML7-01
Mounting bracket

V31-GM-2M-PVC
Female cordset, M8, 4-pin, PVC cable

V31-WM-2M-PVC
Female cordset, M8, 4-pin, PVC cable

Description of Sensor Function

The ultrasonic sensor transmits ultrasonic packets in quick succession and responds to their reflection off the detected object. The sensor has a switch output. The switching point is progammable (Teach-In). Objects beyond the taught-in switching point are not detected (background suppression).

Teach-In of Switching Point SP

To teach in a switching point, proceed as follows:

1. Connect the sensor and turn on the operating voltage.
2. Place the object to be detected at the required distance.
3. Connect the teach-in input (ET) to $-U_B$. This can be done usingthepushbutton or the controller.
   The LED will start flashing after 3 seconds to indicate that the sensor is ready to start the teach-in process (*).
4. Disconnect the teach-in input (ET) with $-U_B$. The switching point SP has now been taught in (*).

(*) If no object is detected within the sensing range of the sensor, the sensor will start flashing at a faster rate. The switching point remains unchanged.

Switching characteristics and display LED

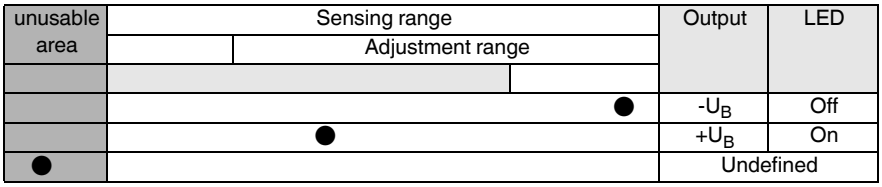

● = Object position

Safety Note

The use of this device in applications, where the safety of persons depends from the devices function, is not allowed!

Release date: 2012-04-11 15:29 Date of issue: 2014-05-15 233250_eng.xml