OCPP to Modbus TCP & RTU Server Gateway

Item number: INMBSOCP0010100

Configure this gateway as a Modbus RTU/TCP - OCPP protocol translator or move a step further with its OCPP Central System mode, which allows the gateway and the BMS to substitute the Central System of the OCPP installation and get all the potential of the Modbus-based BMS.



OCPP to Modbus TCP & RTU - Up to 1 charger

Features and benefits

- **Up to six concurrent Modbus TCP clients supported**
  The gateway supports up to six simultaneous Modbus TCP clients.
- **Commissioning-friendly approach with Intesis MAPS**
  Templates can be imported and reused as often as needed, significantly reducing commissioning time.
- **OCPP scan function: search chargers in the network**
  A scan function is available to search for chargers in the OCPP network.
- **BMS CS mode supports multiple OCPP operations**
  Authorize, Start/StopTransaction, Reservation, Local list management, and more operations supported.
- **Support for both Modbus RTU and Modbus TCP**
  The gateway supports both Modbus RTU and Modbus TCP protocols.
- **Support for OCPP 1.6 JSON**
  The gateway supports the OCPP 1.6 JSON notation format.
- **Fix Modbus register map**
  Fixed Modbus register map. The register number identifies the element.
- **OCPP Central System mode**
  The OCPP readings supported in OCPP Central System mode are Charger info, availability, and MeterValues.

OCPP to Modbus TCP & RTU Server Gateway



General

Net Width (mm)	53
Net Height (mm)	93
Net Depth (mm)	58
Net Weight (g)	92
Packed Width (mm)	120
Packed Height (mm)	80
Packed Depth (mm)	100
Packed Weight (g)	295
Operating Temperature °C Min	0
Operating Temperature °C Max	60
Storage Temperature °C Min	-30
Storage Temperature °C Max	60
Power Consumption (W)	1.3
Input Voltage (V)	9-36 VDC / 24 VAC / 50-60 Hz / 0.140 A / 1.7 W
Power Connector	3-pole
Configuration	Intesis MAPS
Capacity	1 charger with 7 connectors.
Installation Conditions	This gateway is designed to be mounted inside an enclosure. If the unit is mounted outside an enclosure, precautions should always be taken to prevent electrostatic discharge to the unit. When working inside an enclosure (e.g., making adjustments, setting switches, etc.), typical anti-static precautions should always be followed before touching the unit.
Content of Delivery	Intesis gateway and installation manual.

OCPP to Modbus TCP & RTU Server Gateway



General

Mounting	DIN rail mount (bracket included)
Housing Materials	Plastic
Warranty (years)	3 years
Packaging Material	Cardboard

Identification and Status

Product ID	INMBSOCP0010100
Country of Origin	Spain
HS Code	8517620000
Export Control Classification Number (ECCN)	EAR99

Physical Features

Connectors / Input / Output	Power supply, EIA-485, Ethernet.
LED Indicators	Gateway and communication status.
DIP & Rotary Switches	EIA-485 serial port configuration.

Certifications and Standards

ETIM Classification	EC001604
WEEE Category	IT and telecommunications equipment

Use Case

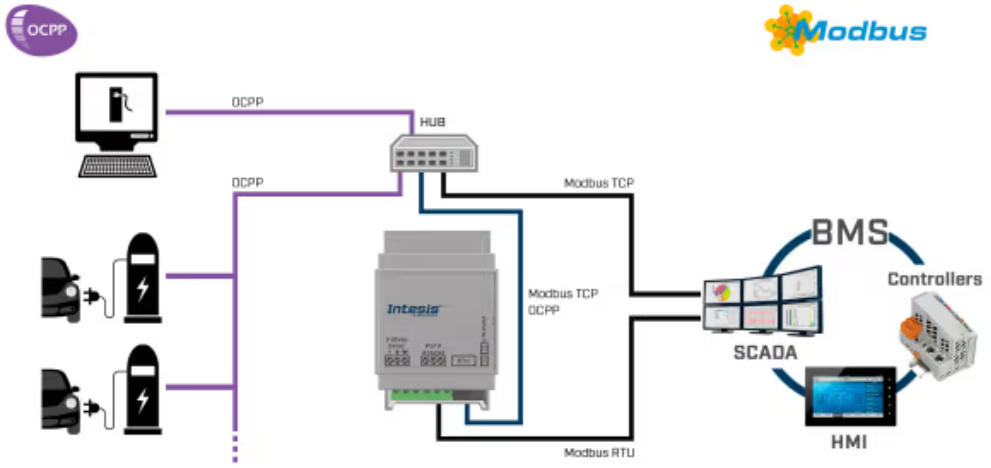

Gateway acting as an OCPP bridge between an OCPP Central System and OCPP chargers.

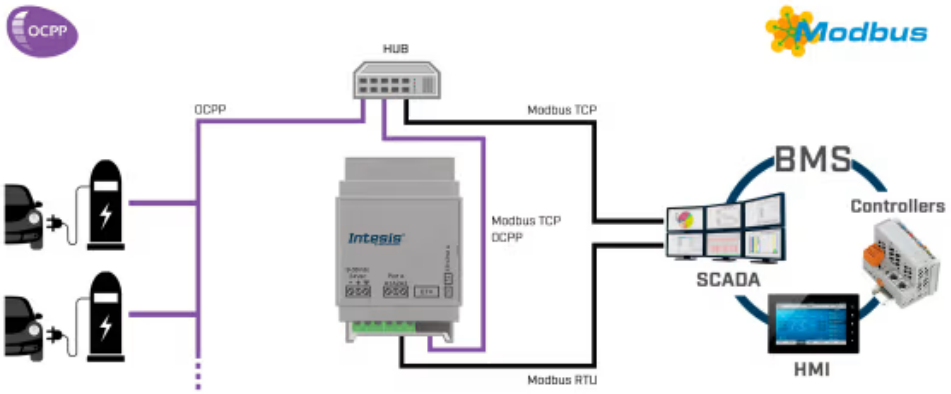

Integration of OCPP EV Charging points into a Modbus installation.