Pressure regulator, Series AS3-RGS

- G 3/8 G 1/2
- Qn = 1600-5200 l/min
- Standard pressure regulator
- Activation Mechanical
- lockable
- for padlocks
- suitable for ATEX



Parts	Pressure regulator
Mounting orientation	Any
Certificates	suitable for ATEX
Working pressure min./max.	See table below
Ambient temperature min./max.	-10 ... 50 °C
Medium temperature min./max.	-10 ... 50 °C
Medium	Compressed air Neutral gases
Regulator type	Diaphragm-type pressure regulator Can be assembled into blocks
Regulator function	with relieving air exhaust
Adjustment range min./max.	See table below
Lock type	for padlocks
Pressure supply	single
Activation	Mechanical
Weight	See table below

Technical data

Part No.			Port	Flow	Working pressure min./max.	Adjustment range min./max.
				Qn		
R412007101			G 3/8	1600 l/min	0,1 ... 16 bar	0,1 ... 1 bar
R412007103			G 3/8	4600 l/min	0,1 ... 16 bar	0,1 ... 2 bar
R412007105			G 3/8	5000 l/min	0,2 ... 16 bar	0,2 ... 4 bar
R412007107			G 3/8	4300 l/min	0,5 ... 16 bar	0,5 ... 8 bar
R412007109			G 3/8	4300 l/min	0,5 ... 16 bar	0,5 ... 10 bar
R412007111			G 3/8	3500 l/min	0,5 ... 16 bar	0,5 ... 16 bar
R412007100		–	G 3/8	1600 l/min	0,1 ... 16 bar	0,1 ... 1 bar
R412007102		–	G 3/8	4600 l/min	0,1 ... 16 bar	0,1 ... 2 bar
R412007104		–	G 3/8	5000 l/min	0,2 ... 16 bar	0,2 ... 4 bar
R412007106		–	G 3/8	4300 l/min	0,5 ... 16 bar	0,5 ... 8 bar
R412007108		–	G 3/8	4300 l/min	0,5 ... 16 bar	0,5 ... 10 bar
R412007110		–	G 3/8	3500 l/min	0,5 ... 16 bar	0,5 ... 16 bar
R412007113			G 1/2	1600 l/min	0,1 ... 16 bar	0,1 ... 1 bar
R412007115			G 1/2	4600 l/min	0,1 ... 16 bar	0,1 ... 2 bar
R412007117			G 1/2	5000 l/min	0,2 ... 16 bar	0,2 ... 4 bar
R412007119			G 1/2	5200 l/min	0,5 ... 16 bar	0,5 ... 8 bar
R412007121			G 1/2	5200 l/min	0,5 ... 16 bar	0,5 ... 10 bar
R412007123			G 1/2	4000 l/min	0,5 ... 16 bar	0,5 ... 16 bar
R412007112		–	G 1/2	1600 l/min	0,1 ... 16 bar	0,1 ... 1 bar
R412007114		–	G 1/2	4600 l/min	0,1 ... 16 bar	0,1 ... 2 bar

Part No.			Port	Flow Qn	Working pressure min./max.	Adjustment range min./max.
R412007116		–	G 1/2	5000 l/min	0,2 ... 16 bar	0,2 ... 4 bar
R412007118		–	G 1/2	5200 l/min	0,5 ... 16 bar	0,5 ... 8 bar
R412007120		–	G 1/2	5200 l/min	0,5 ... 16 bar	0,5 ... 10 bar
R412007122		–	G 1/2	4000 l/min	0,5 ... 16 bar	0,5 ... 16 bar

Part No.	Pressure gauge	Weight	
R412007101	with pressure gauge	0,6 kg	1)
R412007103	with pressure gauge	0,6 kg	1)
R412007105	with pressure gauge	0,6 kg	1)
R412007107	with pressure gauge	0,6 kg	1)
R412007109	with pressure gauge	0,6 kg	1)
R412007111	with pressure gauge	0,6 kg	1)
R412007100	-	0,528 kg	2)
R412007102	-	0,528 kg	2)
R412007104	-	0,528 kg	2)
R412007106	-	0,528 kg	2)
R412007108	-	0,528 kg	2)
R412007110	-	0,528 kg	2)
R412007113	with pressure gauge	0,6 kg	1)
R412007115	with pressure gauge	0,6 kg	1)
R412007117	with pressure gauge	0,6 kg	1)
R412007119	with pressure gauge	0,6 kg	1)
R412007121	with pressure gauge	0,6 kg	1)
R412007123	with pressure gauge	0,6 kg	1)
R412007112	-	0,528 kg	2)
R412007114	-	0,528 kg	2)
R412007116	-	0,528 kg	2)
R412007118	-	0,528 kg	2)
R412007120	-	0,528 kg	2)
R412007122	-	0,528 kg	2)

Nominal flow Qn with secondary pressure p2 = 6 bar at Δp = 1 bar

1) Pressure gauge enclosed separately, Suitable for use in Ex zones 1, 2, 21, 22.

2) Order pressure gauge separately, Suitable for use in Ex zones 1, 2, 21, 22.

Technical information

The pressure dew point must be at least 15 °C under ambient and medium temperature and may not exceed 3 °C .
The rear pressure gauge connection on the pressure regulator is closed with a blanking plug, the front connection is open. Depending on the customer application, a second blanking plug may be necessary. Please order separately (see accessories).
A change in the flow direction (from air supply on the left to air supply on the right) occurs by rotating installation by 180° about the vertical axis. Please see the operating instructions for further details.
Suitable for use in Ex zones 1, 2, 21, 22.
Relieving exhaust (≤ 0.3 bar over set pressure).
With rear exhaust (> 3 bar).

Technical information

Material	
Housing	Polyamide
Front plate	Acrylonitrile butadiene styrene
Seals	Acrylonitrile butadiene rubber

Dimensions

Dimensions

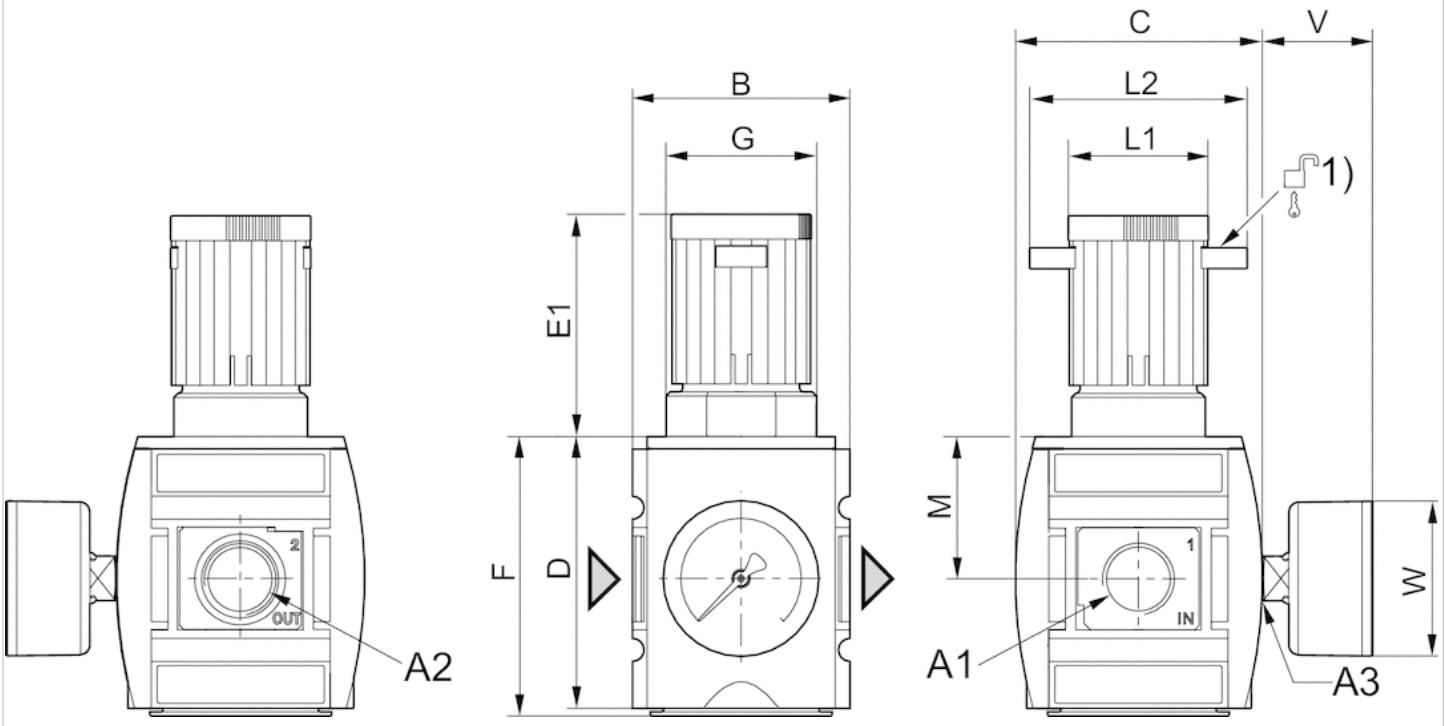

A1 = input
A2 = output
A3 = pressure gauge connection

1) Mounting option for padlocks, max. shackle Ø 8

Dimensions in mm

A1	A2	A3	B	C	D	E1	F	G	L1	L2	M	V	W
G 3/8	G 3/8	G 1/4	63	74	80	63.5	82	M42x1,5	41	60	42.5	33	50
G 1/2	G 1/2	G 1/4	63	74	80	63.5	82	M42x1,5	41	60	42.5	33	50

Diagrams

Pressure characteristics curve, Standard version

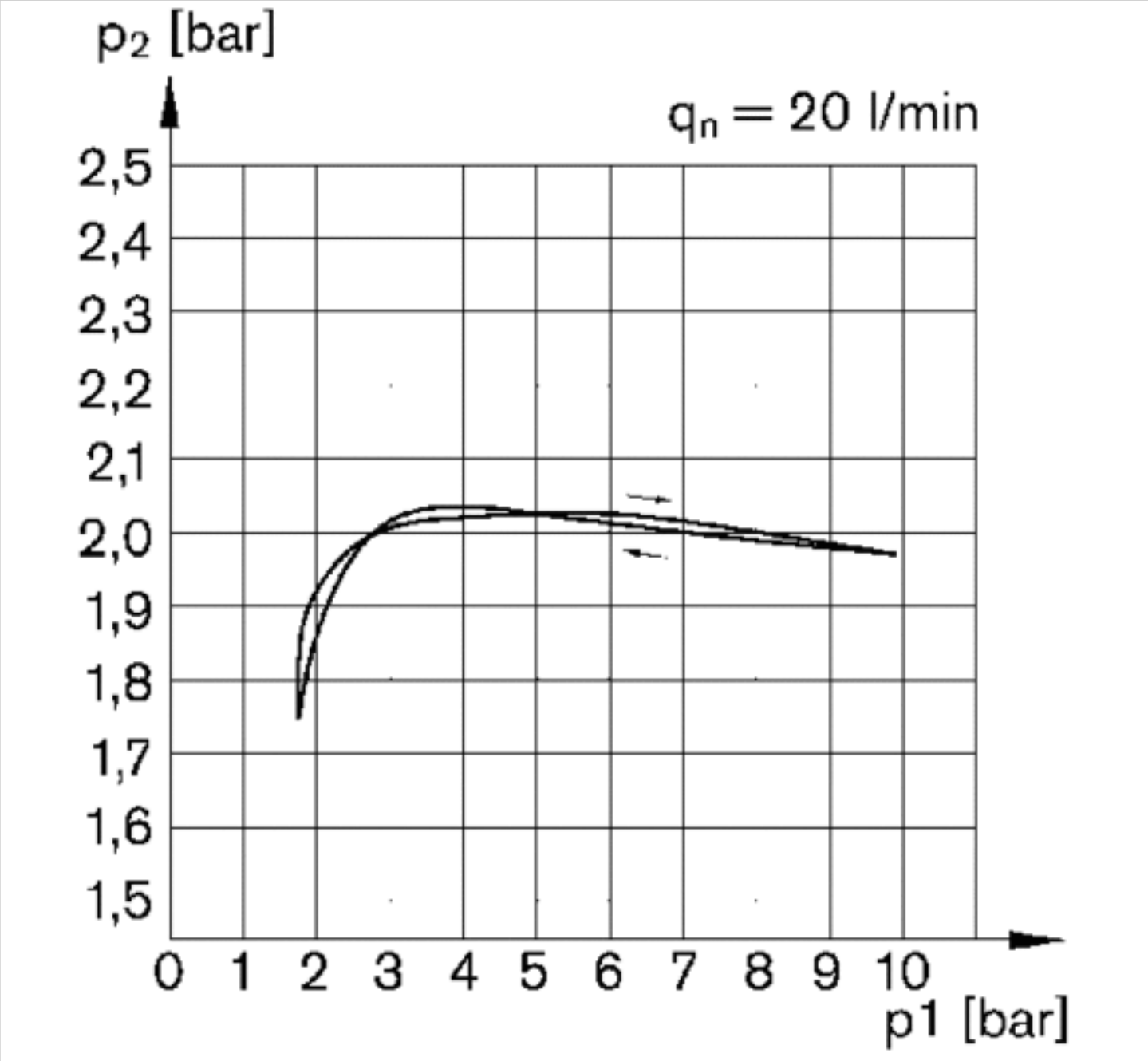

p1 = Working pressure
p2 = Secondary pressure
qn = Nominal flow

Flow rate characteristic (p2: 0,5 - 8 bar)

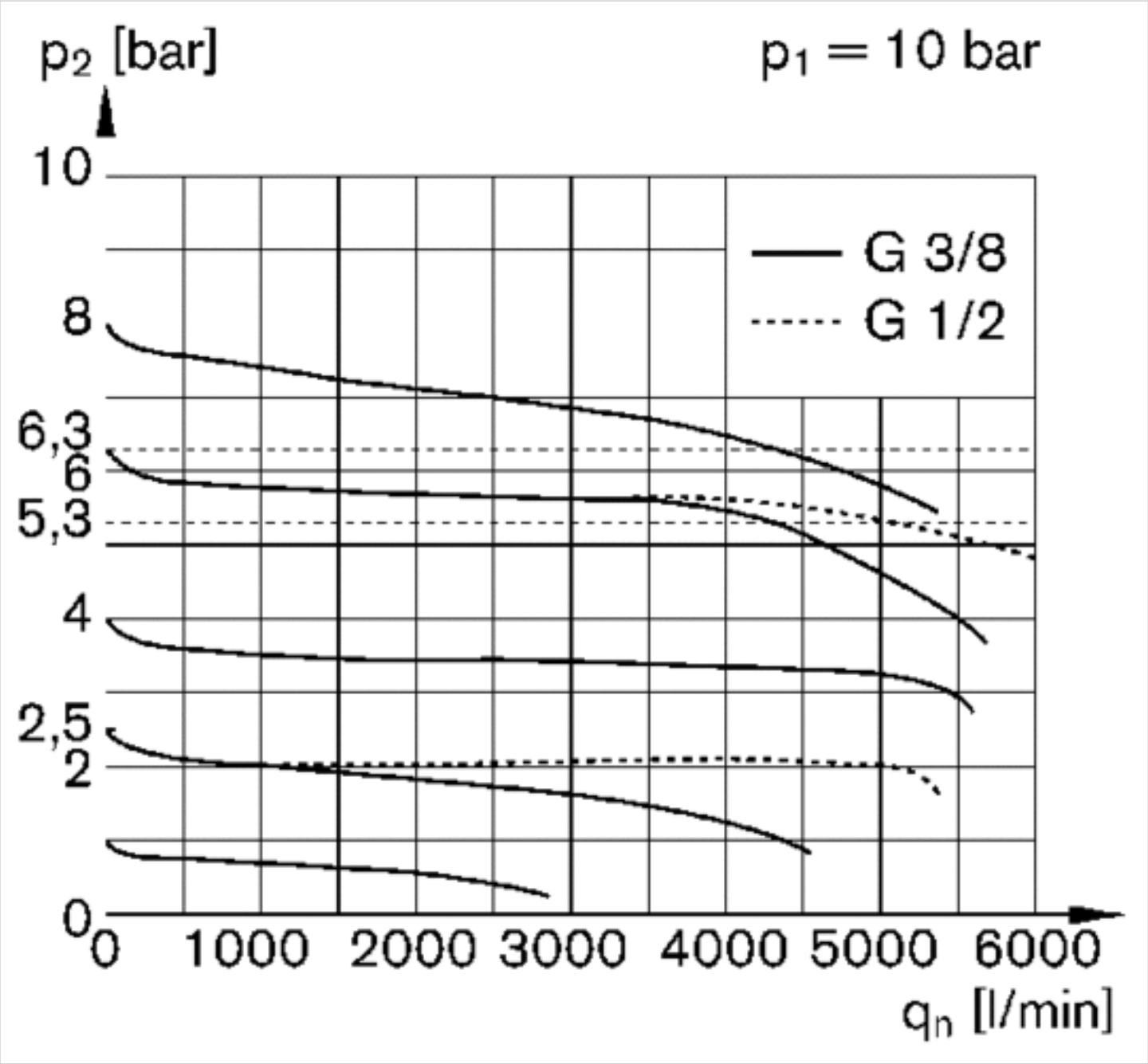

p1 = Working pressure
p2 = Secondary pressure
qn = Nominal flow

Accessories overview

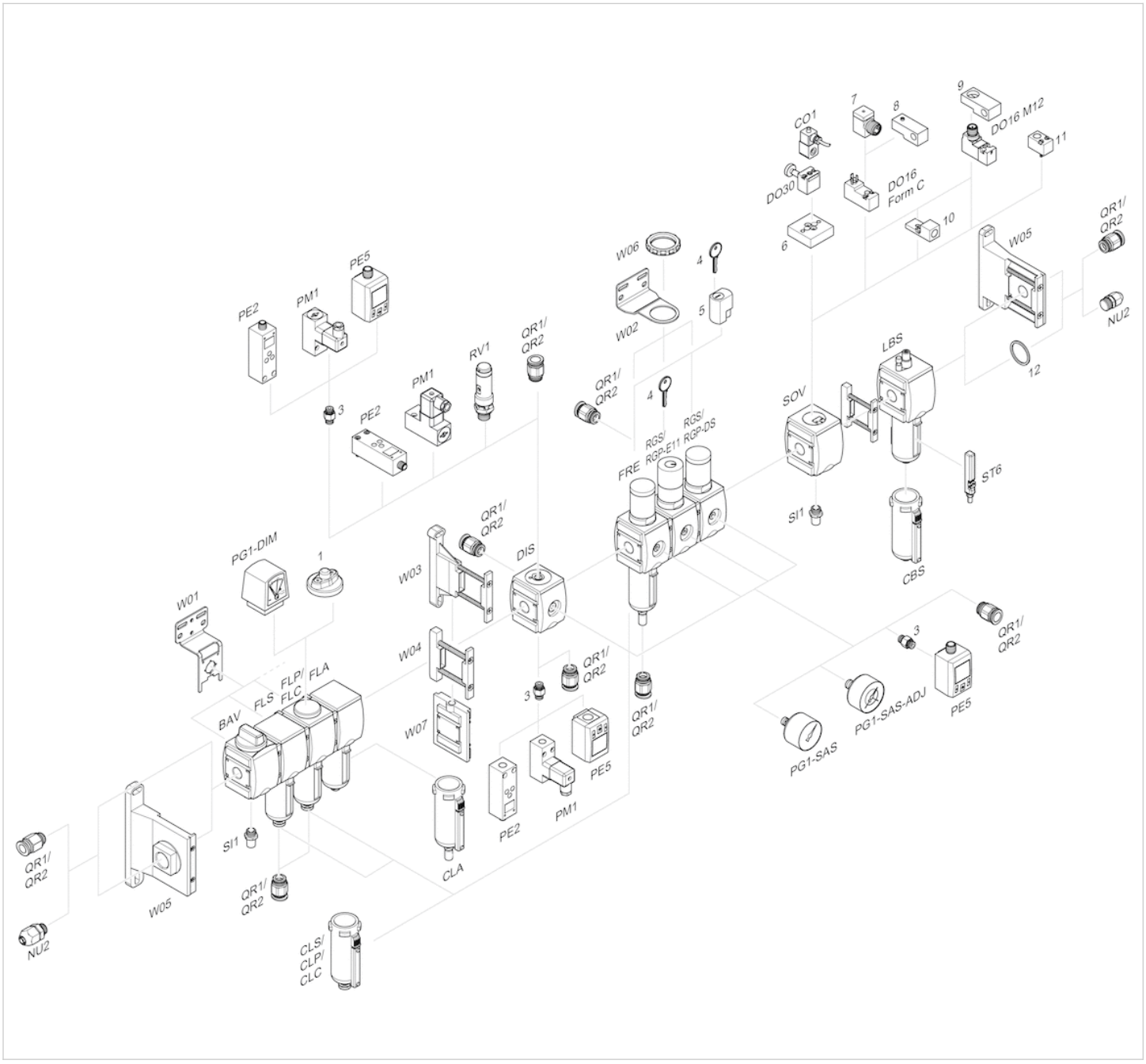

1 = contamination display
3 = Double nipple
4 = Key for E11 locking
5 = mortise lock
6 = Transition plate DO30
7 = Adapter, Series CON-VP
8 = Mounting aid DO16, form C
9 = Mounting aid DO16, M12
10 = Adapter for external pilot air
11 = Adapter pneumatic operation
12 = Sealing ring

Efficient pneumatic solutions, our program: cylinders and drives, valves and valve systems, air supply management



Visit us: Emerson.com/Aventics

Your local contact: Emerson.com/contactus

Emerson.com

Facebook.com/EmersonAutomationSolutions

LinkedIn.com/company/Emerson-Automation-Solutions

Twitter.com/EMR_Automation

An example configuration is depicted on the title page. The delivered product may thus vary from that in the illustration. Subject to change. This Document, as well as the data, specifications and other information set forth in it, are the exclusive property of AVENTICS GmbH. It may not be reproduced or given to third parties without its consent. Only use the AVENTICS products shown in industrial applications. Read the product documentation completely and carefully before using the product. Observe the applicable regulations and laws of the respective country. When integrating the product into applications, note the system manufacturer's specifications for safe use of the product. The data specified only serve to describe the product. No statements concerning a certain condition or suitability for a certain application can be derived from our information. The information given does not release the user from the obligation of own judgement and verification. It must be remembered that the products are subject to a natural process of wear and aging.

The Emerson logo is a trademark and service mark of Emerson Electric Co. Brand logotype are registered trademarks of one of the Emerson family of companies. All other marks are the property of their respective owners. © 2021 Emerson Electric Co. All rights reserved.
2021-06

EMERSON

CONSIDER IT SOLVED™