# Frost protection thermostat
# Model A2G-65



for further approvals
see page 3

## Applications

- For air-side temperature monitoring and prevention of frost damage to water/air heating coils in ventilation and air-conditioning systems

## Special features

- Simple mounting
- Compact and robust design
- High reproducibility
- Integrated switching output
- With automatic resetting



**Frost protection thermostat, model A2G-65**

## Description

The model A2G-65 frost protection thermostat is used for monitoring the air-side temperature of water/air heating coils in ventilation and air-conditioning systems. The small temperature switching differential, the high reproducibility and the automatic resetting make this temperature switch an ideal thermostat for ventilation and air-conditioning applications.

The temperature-controlled switching output can trigger the following measures when the temperature drops below the selected set point (e.g. if there is a risk of frost): Ventilator OFF, external air damper CLOSED, pump ON, activation of a visible/audible warning etc.



Part of your business

## Specifications

| Frost protection thermostat, model A2G-65 | |
|---|---|
| **Setting range for set point** | -10 … +15 °C (factory setting: 5 °C) |
| **Switching differential** | 2 ±1 °C |
| **Reproducibility** | ±0.5 °C |
| **Probe response length** | Approx. 60 cm |
| **Capillary tube** | Material: Copper<br>Capillary tube filling: R 507 |
| **Capillary tube length** | 3 m |
| **Switching output** | Change-over contact, max. AC 250 V, max. 10 A<br>Contact material: Ag/Ni (90 %/10 %) gold-plated 3 µm |
| **Resetting** | Automatic |
| **Connection terminal** | Screw terminal<br>max. 2.5 mm² |
| **Cable entry** | Cable gland M16 x 1.5 |
| **Case material**<br>■ Lower body<br>■ Cover | <br>PA GK30<br>ABS transparent |
| **Standard accessories** | Mounting clamps, 6 pieces |
| **Permissible temperatures**<br>■ Ambient temperature<br>■ Medium temperature | <br>-30 … 70 °C, max. 85 % r. h., non-condensing<br>W + min. 2 K … 70 °C<br>(W = selected set point) |
| **Ingress protection** | IP65 |

## Options

- Manual resetting
- Capillary tube length 1.8 or 6 m

## Dimensions in mm

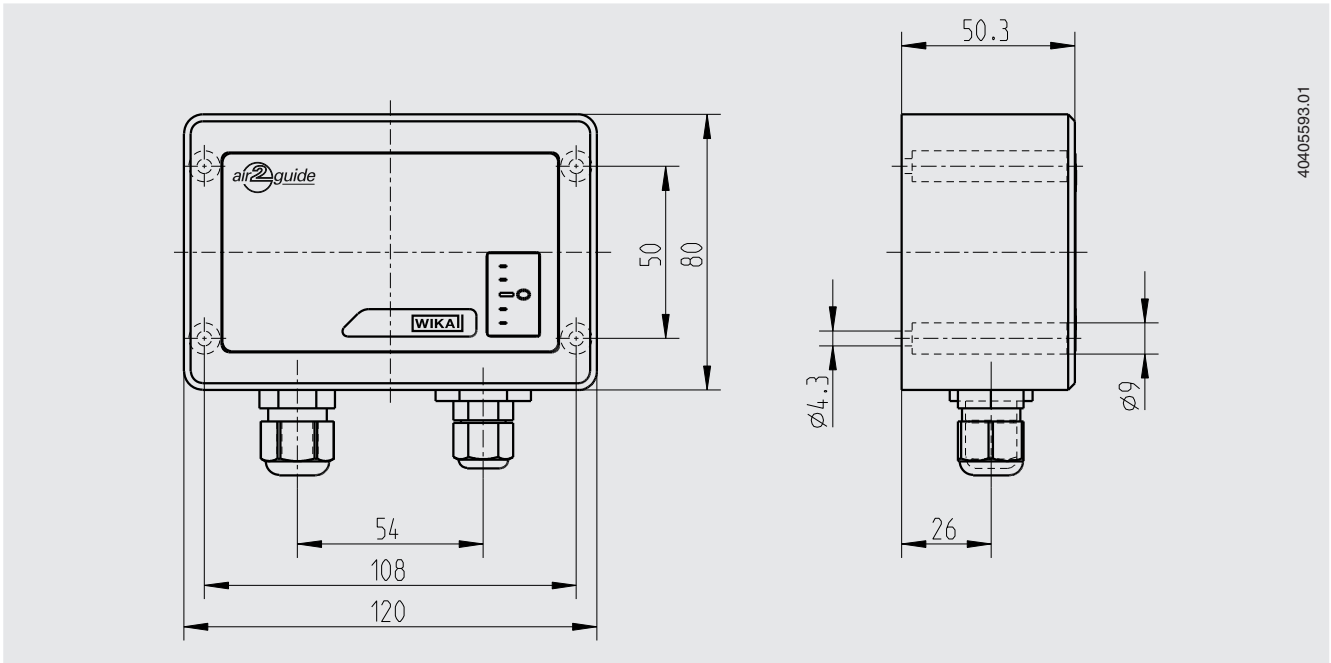

## Electrical connection

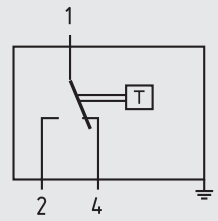


1 - 2 Normal operation
1 - 4 Risk of frost

## Approvals

| Logo | Description | Country |
|---|---|---|
| CE | **EU declaration of conformity**<br>■ EMC directive<br>■ RoHS conformity<br>■ WEEE directive | European Union |
| EAC | **EAC (option)**<br>Import certificate | Eurasian Economic Community |

For deliveries to CIS countries and Ukraine, a technical passport is required and generated for each specific order.

## Certificates (option)

■ 2.2 test report

Approvals and certificates, see website

## Scope of delivery

■ Frost protection thermostat
■ Mounting material for the capillary tube

**Ordering information**
Model / Capillary tube length / Approvals / Certificates / Options

© 02/2011 WIKA Alexander Wiegand SE & Co. KG, all rights reserved.
The specifications given in this document represent the state of engineering at the time of publishing.
We reserve the right to make modifications to the specifications and materials.



**WIKA Alexander Wiegand SE & Co. KG**
Alexander-Wiegand-Straße 30
63911 Klingenberg/Germany
Tel. +49 9372 132-0
Fax +49 9372 132-406
info@wika.de
www.wika.de