EXP1006

EXPANSION MODULE EXP SERIES FOR FLUSH-MOUNT PRODUCTS, 2 RELAY OUTPUTS TO INCREASE NUMBER OF STEPS



General characteristics

Description	2 relay outputs to increase number of steps
Functions	Inputs and outputs

Compatibility with LOVATO Electric product

Automatic power factor controllers		
	DCRL3/5	Yes
	DCRG8	Yes
Automatic transfer switch contrllers		
	ATL610	Yes

Input and Output

Digital outputs

Number of digital output	Nr.	2

Mechanical features

Weight	g	64

Dimensions

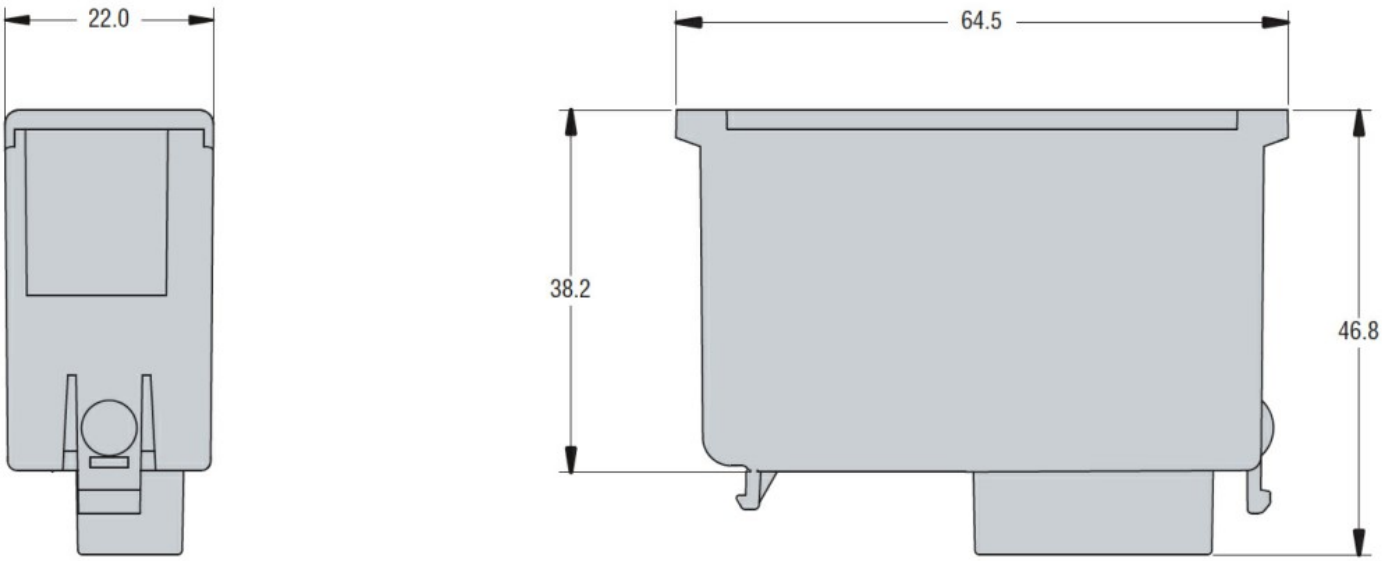

Wiring diagrams

The characteristics described in this document are subject to updates or modifications at any time. The descriptions, technical and functional information, illustrations and instructions in this brochure are purely illustrative, and are consequently not contractually binding

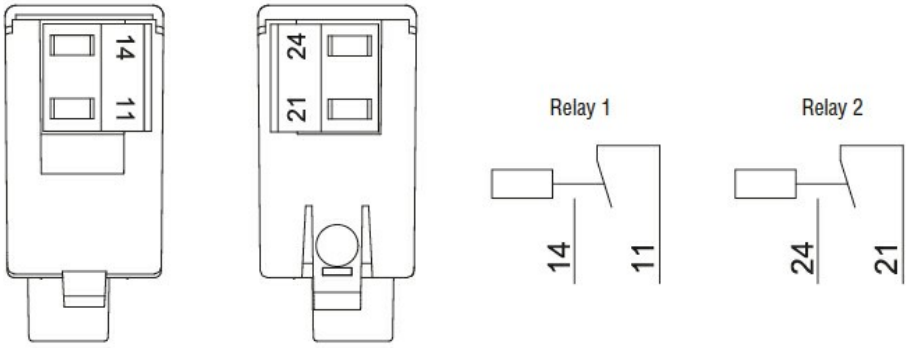

Certifications and compliance

Compliance

CSA C22.2 n° 14
IEC/EN 61000-6-2
IEC/EN 61000-6-3
IEC/EN 61010-1
UL508

Certificates

cULus
EAC

ETIM classification

ETIM 8.0	EC002498 - Accessories/spare parts for low-voltage switch technology

The characteristics described in this document are subject to updates or modifications at any time. The descriptions, technical and functional information, illustrations and instructions in this brochure are purely illustrative, and are consequently not contractually binding