

**LED element,front,white**

**Part no.** M22-LED230-W
**Article no.** 216563

**Catalog No.** M22-LED230-WQ

## Delivery programme

| | | | |
|---|---|---|---|
| Product range | | | RMQ-Titan (drilling dimensions 22.5 mm) |
| Basic function | | | LED elements |
| Single unit/Complete unit | | | Single unit |
| Fixing | | | Front fixing |
| Connection technique | | | Screw terminals |
| Rated operational voltage | $U_e$ | V | 85 - 264 V AC, 50/60 Hz |
| Rated operational current | $I_e$ | mA | 5 - 15 |
| Power consumption | $P_{max.}$ | W | 0.33 |
| | | | At 230 V |
| Colour | | | |
| | | | 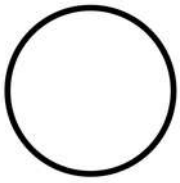 |
| | | | White |
| Protection type | | | IP20 |
| Front ring | | | - N/A - |
| Connection to SmartWire-DT | | | no |

**Notes**

For pushbutton actuators, indicator lights, illuminated pushbutton actuators and illuminated selector switch actuators, the following applies:

M22...-R only in combination with M22-LED...-R

M22...-G only in combination with M22-LED...-G

M22...-W only in combination with M22-LED...-W

M22...-Y only in combination with M22-LED...-W

M22…-B in combination with M22-LED…-W or M22-LED…-B

## Approvals

| | |
|---|---|
| Product Standards | IEC/EN 60947-5; UL 508; CSA-C22.2 No. 14-05; CSA-C22.2 No. 94-91; CE marking |
| UL File No. | E29184 |
| UL Category Control No. | NKCR |
| CSA File No. | 012528 |
| CSA Class No. | 3211-03 |
| North America Certification | UL listed, CSA certified |
| Degree of Protection | UL/CSA Type: - |

## General

| | | | |
|---|---|---|---|
| Standards | | | IEC/EN 60947<br>VDE 0660 |
| Operating torque (screw terminals) | | Nm | 0.8 |
| Protection type | | | IP20 |
| Climatic proofing | | | Damp heat, constant, to IEC 60068-2-78<br>Damp heat, cyclic, to IEC 60068-2-30 |
| Ambient temperature | | °C | |
| Open | | °C | - 25 - + 70 |

| | | | |
|---|---|---|---|
| Storage | | °C | - 40 - + 80 |
| Mounting position | | | As required |
| Mechanical shock resistance | | g | 30<br>Shock duration 11 ms<br>Sinusoidal<br>according to IEC 60068-2-27 |
| Terminal capacities | | $mm^2$ | |
| Solid | | $mm^2$ | 0.75 - 2.5 |
| Stranded | | $mm^2$ | 0.5 - 2.5 |

## Contacts

| | | | |
|---|---|---|---|
| Rated impulse withstand voltage | $U_{imp}$ | V<br>AC | 6000 |
| Rated insulation voltage | $U_i$ | V | 500 |
| Overvoltage category/pollution degree | | | III/3 |

## Notes

**Notes** > 200 V AC/60 Hz: -25/+55 °C

Indoor and protected outdoor installation

## Technical data ETIM 5.0

Low-voltage industrial components (EG000017) / Lamp holder block for control circuit devices (EC000204)
Electric engineering, automation, process control engineering / Low-voltage switch technology / Command and alarm device / Bulb socket block for command and alarm devices (ecl@ss8-27-37-12-09 [AKF027010])

| | | | |
|---|---|---|---|
| With integrated transformer | | | No |
| With integrated voltage decreasing resistor | | | No |
| With integrated lamp | | | Yes |
| With integrated diode | | | Yes |
| Lamp holder | | | None |
| Rated voltage Ue at AC 50 Hz | | V | 230 - 230 |
| Rated voltage Ue at AC 60 Hz | | V | 230 - 230 |
| Rated voltage Ue at DC | | V | 0 - 0 |
| Voltage type for actuating | | | AC |
| Type of lamp | | | LED |
| Connection type auxiliary circuit | | | Screw connection |
| Colour lamp | | | White |
| Type of fastening | | | Front fastening |

## Dimensions

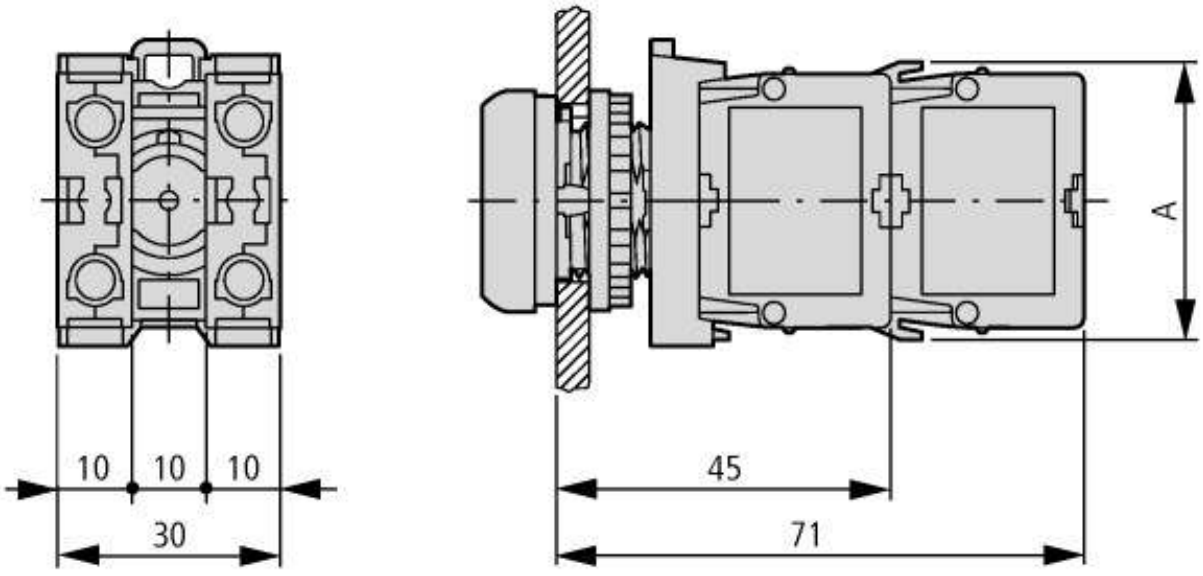


Pushbutton with M22-(C)K…
Pushbutton with M22-(C) LED… + M22-XLED…

## Additional product information (links)

**IL04716002Z (AWA1160-1745) RMQ-Titan System**

| | |
|---|---|
| IL04716002Z (AWA1160-1745) RMQ-Titan System | ftp://ftp.moeller.net/DOCUMENTATION/AWA_INSTRUCTIONS/IL04716002Z2013_08.pdf |


© 11/2013 by Eaton Industries GmbH