DATASHEET - M22-I3-M2



Housing, Pushbutton actuators, Indicator lights, Enclosure, momentary, 2 NC, 2 N/O, Screw connection, Number of locations 2, Grey, inscribed, Bezel: titanium

Part no.	**M22-I3-M2**
Catalog No.	**216533**
Alternate Catalog No.	**M22-I3-M2Q**
EL-Nummer (Norway)	**4355304**

Delivery program

Product range			RMQ-Titan
Basic function			Pushbutton actuators Pushbutton actuators Indicator lights
Mounting hole diameter	∅	mm	22.5
Single unit/Complete unit			Complete unit
Design			Enclosure
			momentary
Connection type			Screw connection
Description			Indicator light, white LED element 85 - 264 V AC
Number of locations		Qty.	2
Colour			
Enclosure covers			Grey
RAL Value			RAL 7035
			light grey, RAL 7035
Button plate			
button plate			red, white, green
Button plate			0 I
			inscribed
Degree of Protection			IP66, IP67, IP69
Front ring			Bezel: titanium
Connection to SmartWire-DT			no
Contacts			
N/C = Normally closed			2 NC
N/O = Normally open			2 N/O
Notes			= safety function, by positive opening to IEC/EN 60947-5-1
Actuator travel and actuation force as per DIN EN 60947-5-1, K.5.4.1			
	mm		4.8
Maximum travel	mm		5.7
Minimum force for positive opening	N		15
Contact sequence			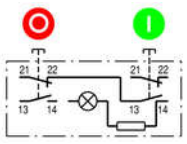

Technical data

General

Standards			IEC/EN 60947 VDE 0660
Lifespan, mechanical	Operations	x 10^6	> 5

Operating frequency	Operations/h		≦ 3600
Actuating force		n	≦ 5
Climatic proofing			Damp heat, constant, to IEC 60068-2-78 Damp heat, cyclic, to IEC 60068-2-30
Degree of Protection			IP66, IP67, IP69
Ambient temperature			
Open		°C	-25 - +70
Mounting position			As required
Mechanical shock resistance		g	30 Shock duration 11 ms Sinusoidal according to IEC 60068-2-27
Cable entry knockouts			
Base		Quantity x M…	2 x 20
Sides		Quantity x M…	2 x 20 2 x 25/20
shipping classification			DNV GL LR
			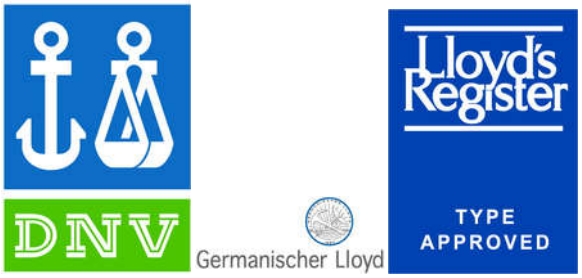

Contacts

Rated conditional short-circuit current	I_q	kA	1

Design verification as per IEC/EN 61439

Technical data for design verification			
Rated operational current for specified heat dissipation	I_n	A	6
Heat dissipation per pole, current-dependent	P_{vid}	W	0.11
Equipment heat dissipation, current-dependent	P_{vid}	W	0
Static heat dissipation, non-current-dependent	P_{vs}	W	1
Heat dissipation capacity	P_{diss}	W	0
Operating ambient temperature min.		°C	-25
Operating ambient temperature max.		°C	70
IEC/EN 61439 design verification			
10.2 Strength of materials and parts			
10.2.2 Corrosion resistance			Meets the product standard's requirements.
10.2.3.1 Verification of thermal stability of enclosures			Meets the product standard's requirements.
10.2.3.2 Verification of resistance of insulating materials to normal heat			Meets the product standard's requirements.
10.2.3.3 Verification of resistance of insulating materials to abnormal heat and fire due to internal electric effects			Meets the product standard's requirements.
10.2.4 Resistance to ultra-violet (UV) radiation			Please enquire
10.2.5 Lifting			Does not apply, since the entire switchgear needs to be evaluated.
10.2.6 Mechanical impact			Does not apply, since the entire switchgear needs to be evaluated.
10.2.7 Inscriptions			Meets the product standard's requirements.
10.3 Degree of protection of ASSEMBLIES			Does not apply, since the entire switchgear needs to be evaluated.
10.4 Clearances and creepage distances			Meets the product standard's requirements.
10.5 Protection against electric shock			Does not apply, since the entire switchgear needs to be evaluated.
10.6 Incorporation of switching devices and components			Does not apply, since the entire switchgear needs to be evaluated.
10.7 Internal electrical circuits and connections			Is the panel builder's responsibility.
10.8 Connections for external conductors			Is the panel builder's responsibility.
10.9 Insulation properties			
10.9.2 Power-frequency electric strength			Is the panel builder's responsibility.

10.9.3 Impulse withstand voltage			Is the panel builder's responsibility.
10.9.4 Testing of enclosures made of insulating material			Is the panel builder's responsibility.
10.10 Temperature rise			The panel builder is responsible for the temperature rise calculation. Eaton will provide heat dissipation data for the devices.
10.11 Short-circuit rating			Is the panel builder's responsibility. The specifications for the switchgear must be observed.
10.12 Electromagnetic compatibility			Is the panel builder's responsibility. The specifications for the switchgear must be observed.
10.13 Mechanical function			The device meets the requirements, provided the information in the instruction leaflet (IL) is observed.

Technical data ETIM 7.0

Low-voltage industrial components (EG000017) / Control circuit devices combination in enclosure (EC000225)

Electric engineering, automation, process control engineering / Low-voltage switch technology / Command and alarm device / Command and alarm device combination in housing (ecl@ss10.0.1-27-37-12-16 [AKF034014])

Number of command positions			3
Number of push buttons			2
Number of indicator lights			1
Number of key switches			0
Number of selector switches			0
Number of mushroom-shaped push-buttons			0
Suitable for emergency stop			No
Rated control supply voltage Us at AC 50HZ		V	85 - 264
Rated control supply voltage Us at AC 60HZ		V	85 - 264
Rated control supply voltage Us at DC		V	0 - 0
Colour housing cover			Grey
Material housing			Plastic
Number of contacts as normally open contact			2
Number of contacts as normally closed contact			2
Number of contacts as change-over contact			0
Degree of protection (IP)			IP67/IP69K
Degree of protection (NEMA)			4X

Approvals

Product Standards			IEC/EN 60947-5; UL 508; CSA-C22.2 No. 14-05; CSA-C22.2 No. 94-91; CE marking
UL File No.			E29184
UL Category Control No.			NKCR
CSA File No.			012528
CSA Class No.			3211-03
North America Certification			UL listed, CSA certified
Degree of Protection			UL/CSA Type 3R, 4X, 12, 13

Dimensions

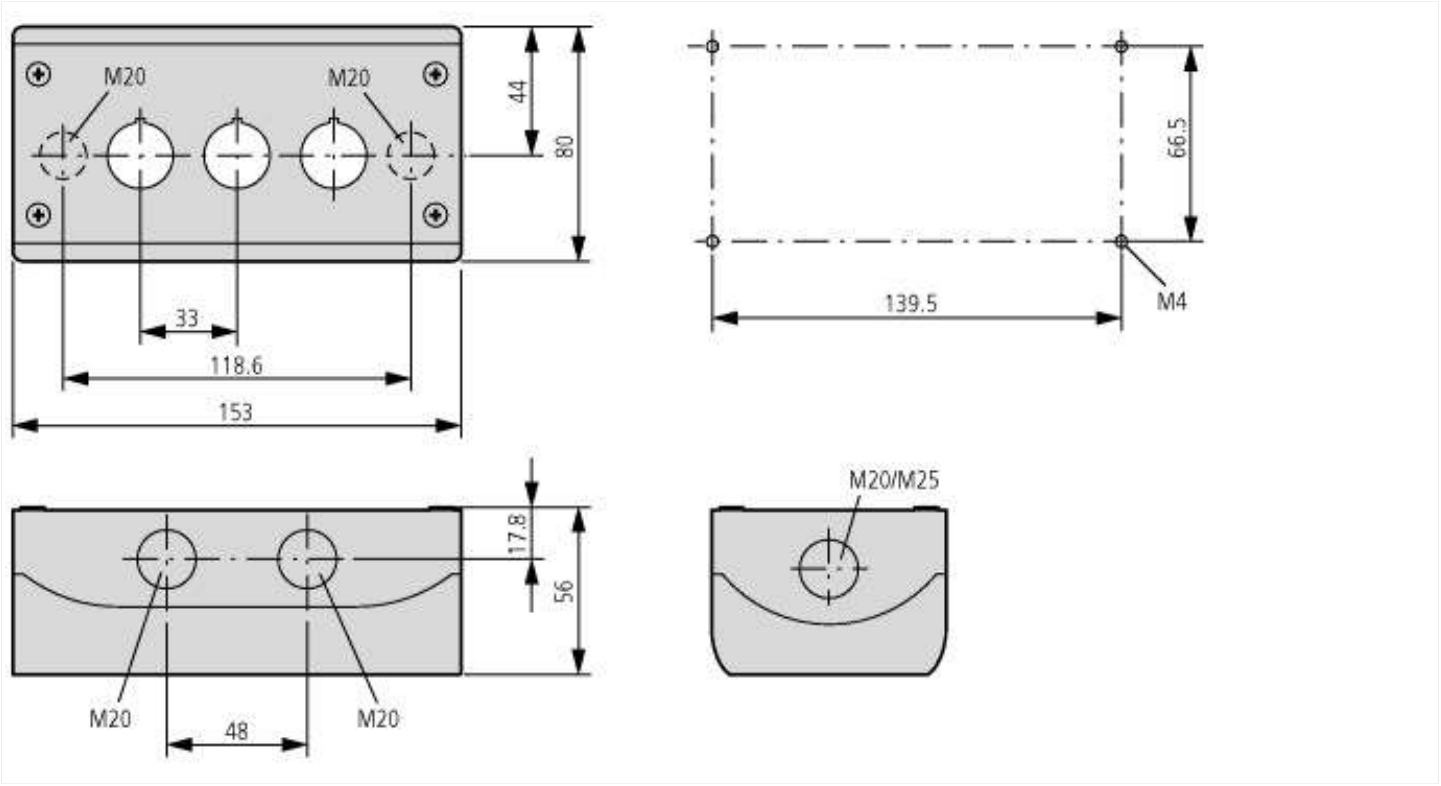

© 06/2021 by Eaton Industries GmbH