PRESSURE COMPENSATION DEVICE (STAINLESS STEEL/ALUMINIUM)

DA 284 | IP66 / IP67





Photo: M40 in stainless steel



Photo: M12 in aluminium

- > High degree of protection
- > Waterproof membrane
- > Corrosion resistant
- > Food safe

In enclosures and housings with a high protection class, differential pressure happens due to internal and external temperature changes. In the event of negative pressure, dust and humidity can be drawn into the enclosure through the seals on the doors. This can cause condensation when the air in the enclosure cool down. The easy-to-fit DA 284 pressure compensation device enables pressure compensation with protection class IP66 (M12: IP66/IP68). Additionally, the watertight membrane inside the pressure compensation device allows humidity to escape from the cabinet at overpressure, while preventing water, humidity or dirt intrusion at under pressure.

EAC

TECHNICAL DATA

Torque	5 Nm
Depth in enclosure	approx. 9 mm
Sealing	sealing gasket NBR
Filter	waterproof membrane
Dimensions	M40: Ø 58 x 31 mm, M12: Ø 17 x 21 mm
Fitting position	variable
Operating/Storage temperature	-35 to +80 °C (-31 to +176 °F)
Approvals	EAC
Note	Material adheres to limit values in accordance with RoHS3

Installation: Make cut-out Ø 40.5$^{+0,5}$ mm for size M40/ Ø 12+ 0,2 mm for size M12 in enclosure wall and mount pressure compensation device with nut. Please make sure that the sealing gasket is put in place on the outer side panel of the enclosure.

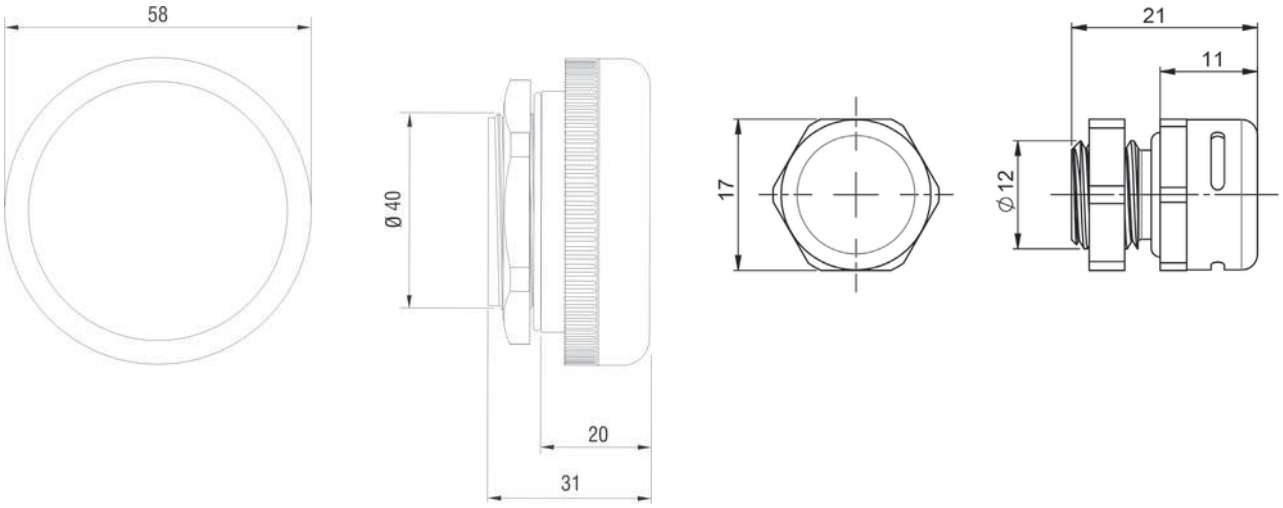

Art. No.	Thread	Material	Protection type	Air permeability	1 packaging unit	Weight (approx.)
28401.0-00	M40 x 1,5	V2A (DIN 1.4305 / AISI 303)[1]	IP66 (EN 60529) / IPX9K (EN 40050-9)	1.200 l/h	1 piece	0,2 kg
28401.0-02	M40 x 1,5	V4A (DIN 1.4404 / AISI 316L)	IP66 (EN 60529) / IPX9K (EN 40050-9)	1.200 l/h	1 piece	0,2 kg
28404.0-00	M12 x 1,5	Nickel-plated aluminum[2]	IP67	220 l/h	1 piece	0,009 kg

[1] V2A is not sea waterproof
[2] Corrosion test according to ISO 9227:2017

www.stego.de | www.stego.co.uk | www.stegonorden.se

24.02.2022 | Specifications are subject to change without notice. Errors and omissions excepted. Suitability of this product for its intended use and any associated risks must be determined by the end customer/buyer in its final application.