Deep groove ball bearings, single row, seal on both sides

Principal dimensions			Basic load ratings		Fatigue load limit	Speed ratings		Mass	Designation
			dynamic	static		Reference speed	Limiting speed		
d	D	B	C	C_0	P_u				* - SKF Explorer bearing
mm			kN		kN	r/min		kg	-
45	85	19	35,1	21,6	0,915	-	5000	0,41	6209-2RS1 *

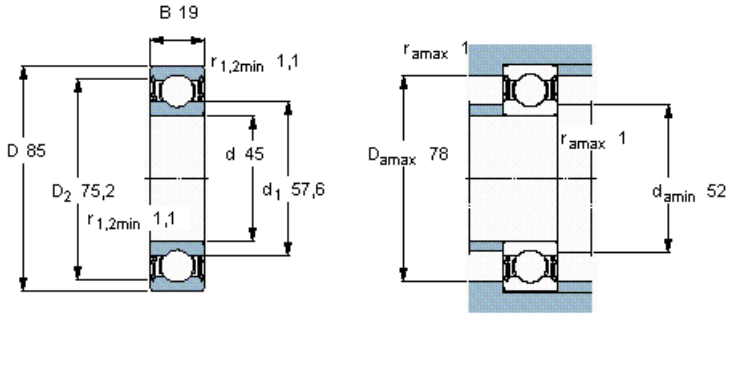

Calculation factors

k_r 0,025
f_0 14