A9152118

Intermediate protection ring L

Serves as a sealing ring and impact protection and ensures 3 mm more installation height. Individual colour choice and designs on demand.

Supply
1 intermediate ring



TECHNICAL DATA

Material	SEBS (TPE)
Colour	volcano
Standards	RoHS compliant, REACH compliant

Length	76 mm
Width	120 mm
Height	21 mm

Please take the dimensions from current parts. These are subject to material- and manufacturing-specific tolerances.

PURCHASING DATA

Weight/1 part	22 g
Customs tariff number (OKW product)	39269097
Country of manufacture	Germany

CUSTOMISING OPTIONS

What else do you need to create your own personal product? We can supply our enclosures and tuning knobs fully modified to suit your electronic components and design requirements. Please advise for anything else we can do for you.

Customising options for A9152118

A9152118

Intermediate protection ring L



Installation / Assembly
of accessories

A9152118

Intermediate protection ring L

SYSTEM COMPONENTS TO COMPLETE



A9052107
SOFT-CASE L
ABS (UL 94 HB)
off-white RAL 9002
73x117x24mm
IP 54 opt., IP 40



A9052108
SOFT-CASE L
ABS (UL 94 HB)
lava
73x117x24mm
IP 54 opt., IP 40



A9052117
SOFT-CASE L
ABS (UL 94 HB)
off-white RAL 9002
73x117x24mm
IP 40



A9052118
SOFT-CASE L
ABS (UL 94 HB)
lava
73x117x24mm
IP 40



A9052127
SOFT-CASE L
ABS (UL 94 HB)
off-white RAL 9002
73x117x24mm
IP 40



A9052128
SOFT-CASE L
ABS (UL 94 HB)
lava
73x117x24mm
IP 40



A9052209
SOFT-CASE L
PMMA (IR) (UL 94 HB)
black RAL 9005
73x117x24mm
IP 54 opt., IP 40



A9052219
SOFT-CASE L
PMMA (IR) (UL 94 HB)
black RAL 9005
73x117x24mm
IP 40



A9052229
SOFT-CASE L
PMMA (IR) (UL 94 HB)
black RAL 9005
73x117x24mm
IP 40

Subject to technical modification without notice. © by OKW Gehäusesysteme, Buchen/Germany.

SCHNITT A-A



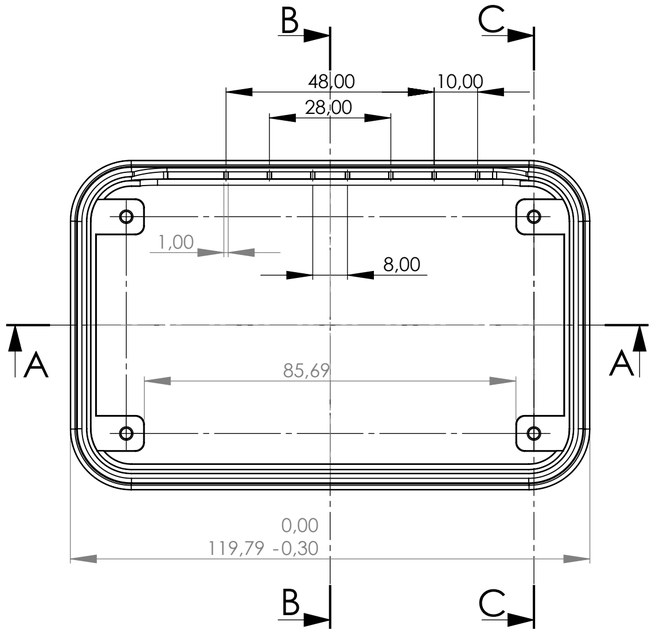

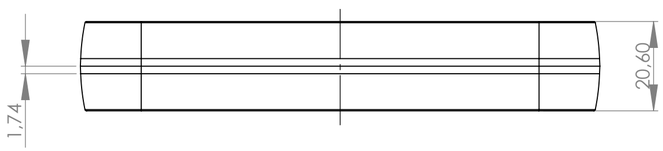

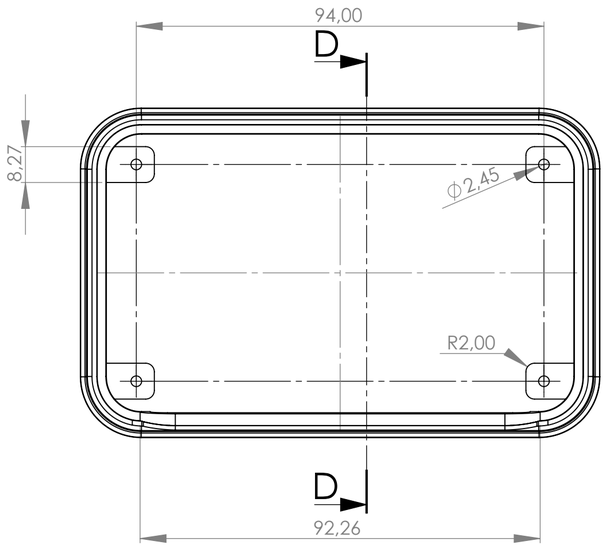

SCHNITT B-B

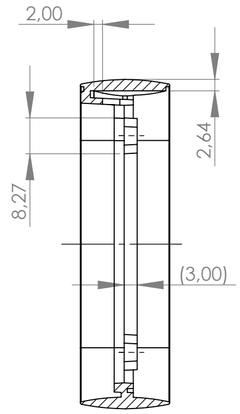

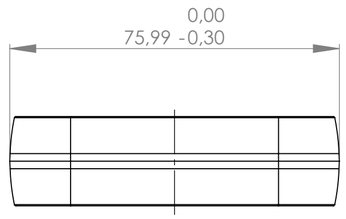

SCHNITT D-D

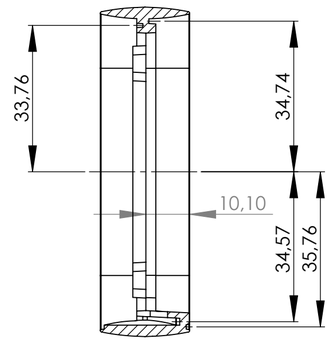

SCHNITT C-C

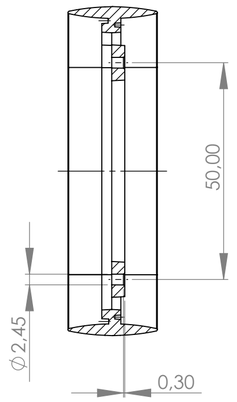

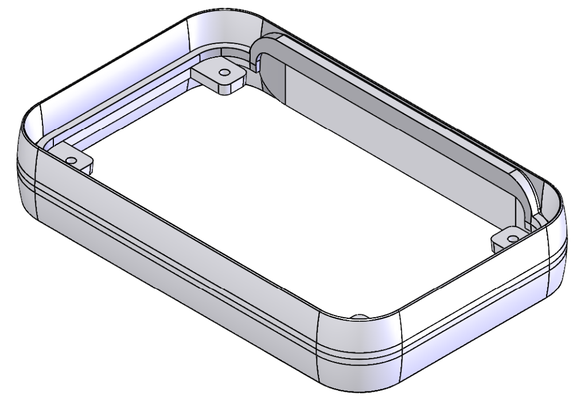

Bitte die Maße an aktuellen Teilen abnehmen.
Diese unterliegen material- und produktionsspezifischen Fertigungstoleranzen.

Please take the dimensions from current parts.
These are subject to material- and manufacturing-specific tolerances.

Informationskopie
wird nicht aktualisiert
Copy for Information
will not be updated

Technische Änderungen vorbehalten. Irrtümer oder Druckfehler begründen keinen Anspruch auf Schadenersatz. Wichtige Einbaumaße bitte direkt mit dem aktuellen Produkt abstimmen.

Subject to technical modification without prior notice. Typographical and other errors do not justify any claim for damages. All dimensions should be verified using an actual moulded part.

Sous reserve de modifications techniques. Toute erreur ou faute d'impression ne justife aucune demande d'indemnisation. Nous prions les clients de verifer les dimensions des composants avec les boitiers avant le montage.

Erst. am:	13.05.2009	Toleranzen:	Status:
Erst. von:	Herrlich	DIN 16901 T130	SERIENFREIGABE
Freig. am:	11.10.2013	Volumen:	Zeichnungsart:
Freig. von:	D. Hasselbach		KUNDE
Revision:	01		DIN 6 Teil 2

This document contains proprietary information of OKW Gehäusesysteme GmbH and is tendered subject to the conditions that the information be retained in confidence not be reproduced or copied and not be used or incorporated in any product.

OKW GEHÄUSE SYSTEME

SOFT-CASE L
Zwischenring

A9152001 | M 1:1

Für dieses Dokument behalten wir uns alle Urheberrechte vor. Es darf auch auszugsweise weder vervielfältigt noch Dritten in irgendeiner Form zugänglich gemacht werden.

Dateiname: 00011471