REVISIONS			
REV.	DESCRIPTION	DATE	INIT
0	INITIAL RELEASE		

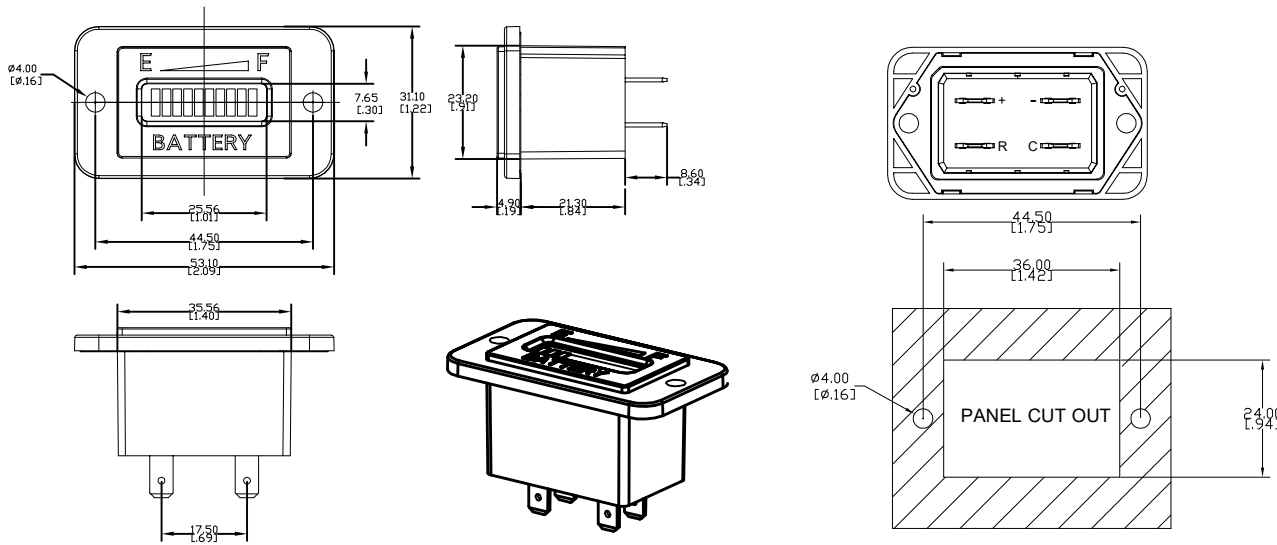

电池类型 (可定制)		电量等级									
		1	2	3	4	5	6	7	8	9	10
铅酸	12V	10.38	10.59	10.80	11.01	11.22	11.43	11.64	11.85	12.30	>12.3
	24V	20.76	21.18	21.60	22.02	22.44	22.86	23.28	23.70	24.60	>24.6
	36V	31.14	31.77	32.40	33.03	33.66	34.29	34.92	35.55	36.90	> 36.9
	48V	41.52	42.36	43.20	44.04	44.88	45.72	46.56	47.40	49.20	> 49.2
	72V	62.28	63.54	64.80	66.06	67.32	68.58	69.84	71.10	73.80	> 73.8

1.Display
●Battery level display method: 10 LED,3 kinds of display method: 1red+2yellow+7green(default)、 all red、all green
2.Remaining Battery capacity measurement
●Once connected to the power, it will recognize the current remaining battery capacity.
●Customized remaining battery capacity delay function, when discharging, it will down one by one per LED bar, one bar asks 155s delay; when charging, it will rise one by one LED bar, on bar asks 200s delay.
●Different battery types can be customized.
3.Relay out function:
●When remaining capacity is ≥10%, output signal of 5V; when remaining capacity is<10%, output signal of 0V.
4.Firmware upgrade
●Connect the pin C and pin R to TX and RX of upgrade tooling(not concluded) to upgrade the program.
5.Programming via communication：
●Connect the pin C and pin R to TX and RX of Runleader's programmer(not concluded)to modify the function and parameter.
6.Parameter
●Housing material：PC545flame retardant,black
●Product dimension：53.1*31.1*34.8mm
●Working voltage：DC 9-60V
●Working current：≤100mA
●Display window size：25.5*7.6mm
●Working temperature：-20°C~75°C
●Waterproof rate：IP68
●Pin's spec：4.8mm
●Net weight:around27g。

Test and Certificates
1.High voltage shock test RLT-PM3RD319
●Connect the positive pole of the product to the positive pole of external battery, and connect the negative pole of the product to the negative pole of the external battery, program voltage at 12V for 1s and 90V for 4s, cycling 1H， product with the normal function after testing.
2.Limit voltage testt RLT-PM3RD231
●Connect the positive pole of the product to the positive pole of external battery, and connect the negative pole of the product to the negative pole of the external battery,program the voltage at 75V for 1H, temperature rise test with normal range.
3.Temperature storage test ISO16750-4 2012
●Use the constant temperature and humidity test chamber,program the low temperature at -20 ℃ for 24H and high temperature at 75℃ for 24h Finished products work continuously at high temperature of 45°C for 24H product with the normal function after testing.
4.Vibration test ISO16750-3 2010
●The product is fixed on the vibration table to set the amplitude: 1.52mm, each axis is measured 2H, a total of 6H.
Sweeping mode: X, Y, Z axis, frequency band 0-150-0 HZ full wave, verification is completed to check the normal function of the product, no parts off.
5.Water proof ISO-20653-2006
●Without water get into the product during the test of IP68, product with the normal function.
6.Drop test IEC68-2-32
●Mount the product on the drop test fixture, adjust the height to 1 metre, drop each side of the sample once freely, check the appearance and structure of the product after the test to see if the product is normal and functions normally.
7. Resistance to yellowing BS EN60068-2-5-2011
●Mount the product on the rotating disk of yellowing testing chamber, program the timer at 24H, under the UV ultraviolet light for testing, product with the normal appearance after testing.
8.Data storage test
●Program the parameter by connecting the programmer, power off 10s and then restart the power, all the parameters saved.
9.CE certificate
●Product is CE certified.
10.RoHS certificate
●Product is CE certified.

Product use scenario:
● The product is suitable for the devices with storage battery for measuring the battery level.

CAUTION
● The product can not be operated for extended periods at the temperature outside the normal operating temperature.
● The product can not be operated for extended periods at the voltages outside the normal operating voltage.

UNLESS OTHERWISE SPECIFIED DIMENSIONS ARE IN INCHES
TOLERANCES ARE:
.X± .1
.XX± .02
.XXX± .005
X°± 1°

COMPUTER GENRATED DRAWING-NO MANUAL CHANGES ALLOWED

DRAWN 马金棋 | DATE 2024-9-29
CHECKED | DATE
APPROVEO | DATE
MATERIAL N/A
FINISH N/A
DO NOT SCALE DRAWING
PROJECTED VIEWS ARE 3RD ANGLE
STATUS DS4_DESIGN

Runleader®
NINGBO JIANGBEI RUN LEADER ELECTRONICS CO., LT
WWW.RUN-LEADER.COM

TITLE Battery Indicator
SIZE A | PART.NO. RL-BI003-1（整合版本）
SCALE NTS | SHEET 1 OF 1 | PROJECT NO. 351 | REVISION 0