

# 56 Spring-Loaded Plunger

## Flare-in style – Miniature, Small and Large

- **Simplified positioning of sliding components**
- **Quick-release hinge for removable door**
- **Designate access with color**

### Material and Finish

End cap: Steel, zinc plated, chromate, plus sealer
Ferrule: Aluminum, natural
Stud: Steel, hardened, zinc plated, chromate, plus sealer

Knob: (Prism plungers only) PC/ABS, UL94-V0 Rated

Spring: 300 series stainless steel, passivated

### Installation Notes

Press with approximately 2,000 N (562 lbf) until ferrule is flared into the countersink in the panel.
A solid back-up tool must be used for proper installation

### Install Tool

Part number: 47-110 (Miniature)
56-7-TOOL (Large and Small)

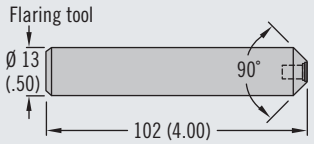


### Part Number

See table

### Applications

Retractable Hinge

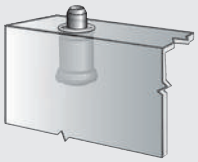

Positioning / Secondary Catch

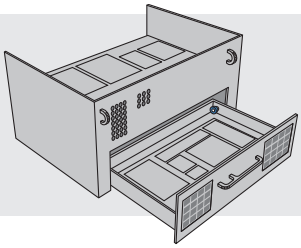

Quick Installation

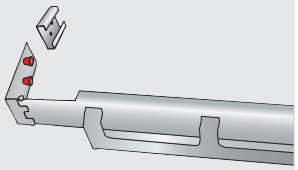

### Flare-in style

#### Bright - Miniature and Small

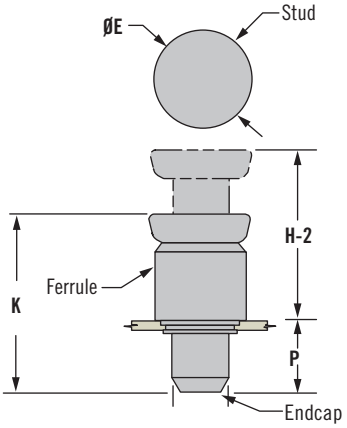


#### Prism - Miniature and Small

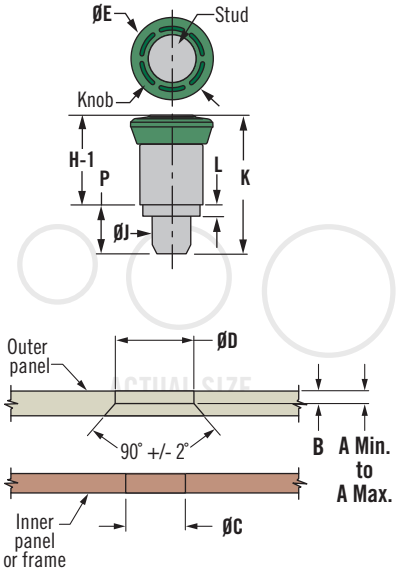


#### Prism - Large

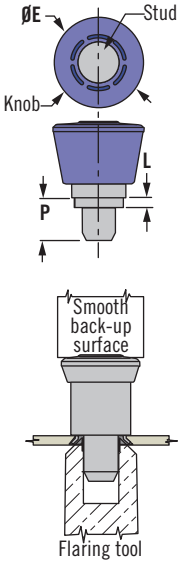


### Specifying Prism Color

To indicate color, change the last three digits of the part number.
Example: 56-161-**000**, black; 56-161-**013**, red



**000** Black (shown in table)

**008** Blue

**013** Red

**014** Green

Your color contact Southco

| Outer Panel Thickness | | P | Size | Knob Style | Part Number | | H-1 | H-2 | Ø E | K | L | B | Ø J | Ø D | Ø C |
|---|---|---|---|---|---|---|---|---|---|---|---|---|---|---|---|
| A Min. | A Max. | | | | Hold-Open | Without | | | | | | | | | |
| 0.8 (.031) | 1.5 (.06) | 4.4 (.17) | Mini | Bright | 56-21-1-15 | 56-20-1-15 | 9.9 (.39) | 13.6 (.54) | 8.5 (.33) | 14.3 (.56) | 1.0 (.04) | 0.41 (.016) | 4.29 (.169) Max | $6.76^{+0.1}_{-0.0}$ ($.266^{+.004}_{-.000}$) | $4.3^{+0.13}_{-0.0}$ ($.17^{+.005}_{-.000}$) |
| | | | | Prism | 56-121-1-000 | 56-120-1-000 | 10.6 (.42) | 14.3 (.56) | 9 (.35) | 15 (.59) | | | | | |
| 1.5 (.06) | 2.3 (.09) | 5.2 (.20) | | Bright | 56-21-2-15 | 56-20-2-15 | 9.1 (.36) | 12.8 (.50) | 8.5 (.33) | 14.3 (.56) | 1.8 (.07) | | | | |
| | | | | Prism | 56-121-2-000 | 56-120-2-000 | 9.8 (.39) | 13.5 (.53) | 9 (.35) | 15 (.59) | | | | | |
| 1.52 (.06) | 3.17 (.125) | 7.9 (.31) | Small | Bright | 56-71-1-15 | 56-70-1-15 | 13.7 (.54) | 19.8 (.78) | 11.5 (.45) | 21.5 (.85) | 1.78 (.07) | 0.41 (.016) | 6.33 (.249) | $9.19^{+0.7}_{-0.0}$ ($.362^{+.003}_{-.000}$) | $6.4^{+0.1}_{-0.0}$ ($.250^{+.005}_{-.000}$) |
| | | | | Prism | 56-171-1-000 | 56-170-1-000 | 14.5 (.57) | 20.5 (.81) | 13.3 (.52) | 22.2 (.87) | | | | | |
| | | | Large | Prism | 56-271-1-000 | 56-270-1-000 | 14.5 (.57) | 20.5 (.81) | 17 (.67) | 22.2 (.87) | | | | | |
| 3.17 (.125) | 4.7 (.185) | 9.4 (.37) | Small | Bright | 56-71-2-15 | 56-70-2-15 | 12.2 (.48) | 18.2 (.72) | 11.5 (.45) | 21.5 (.85) | 3.3 (.13) | 1.52 (.06) | | | |
| | | | | Prism | 56-171-2-000 | 56-170-2-000 | 12.9 (.51) | 19 (.75) | 13.3 (.52) | 22.2 (.87) | | | | | |
| | | | Large | Prism | 56-271-2-000 | 56-270-2-000 | 12.9 (.51) | 19 (.75) | 17 (.67) | 22.2 (.87) | | | | | |

# 56 Spring-Loaded Plunger

## Press-in style – Miniature, Small and Large



### Press-In Style

**Prism - Small and Miniature**

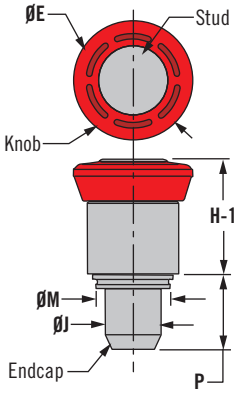


**Prism - Large**

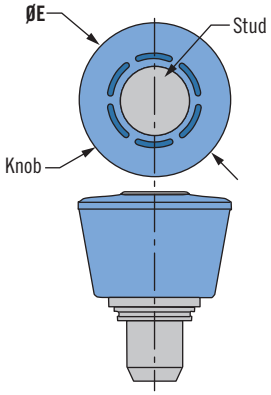


**Bright - Small and Miniature**

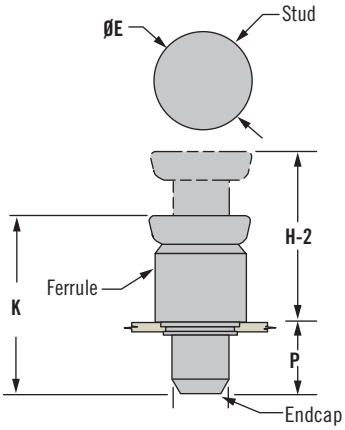


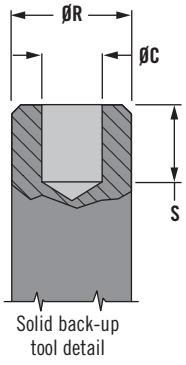


(Customer Supplied)

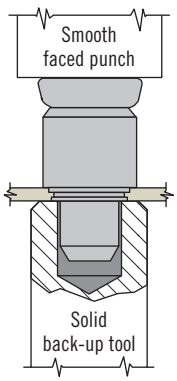


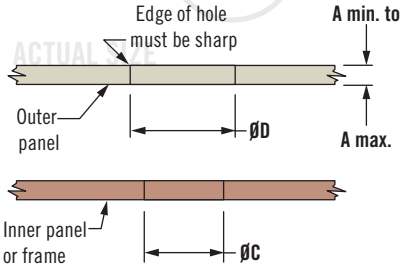


### Specifying Prism Color

To indicate color, change the last three digits of the part number.
Example: 56-161-**000**, black; 56-161-**013**, red

| 000 | 008 | 013 | 014 | |
|---|---|---|---|---|
| Black (shown in table) | Blue | Red | Green | Your color contact Southco |

- **Simplified positioning of sliding components**
- **Quick-release hinge for removable door**
- **Designate access with color**

### Material and Finish

End cap: Steel, zinc plated, chromate, plus sealer

Ferrule and stud: Steel, hardened, zinc plated, chromate, plus sealer

Knob: (Prism plungers only) PC/ABS, black, UL94-V0 Rated

Spring: 300 series stainless steel, passivated

### Installation Notes

Press knob with approximately 9500 N (3000 lbf.) (Mini) for steel, 5000 N (1500 lbf.) (Mini) for aluminum panels until ferrule sits flush with panel. A solid back-up tool must be used for proper installation.

Recommended minimum distance from edge of panel to center line of hole is 9.6 (1.14).

For use in material hardnesses RB70 or less, such as low carbon steels that are half hard or softer, stainless steel in the annealed condition and aluminum.

### Part Number

See table

| Outer Panel Thickness | | P | Size | Knob Style | Part Number | | H-1 | H-2 | Ø E | K | Ø J | Ø M | Ø D | Ø C | Ø R | Ø S |
|---|---|---|---|---|---|---|---|---|---|---|---|---|---|---|---|---|
| A Min. | A Max. | | | | Hold-Open | Without | | | | | | | | | | |
| 0.8 (.031) | 1.5 (.06) | 4.4 (.17) | Mini | Bright | 56-11-15 | 56-10-15 | 9.2 (.36) | 12.9 (.51) | 8.5 (.33) | 13.6 (.54) | 4.29 (.169) Max. | 6.6 (.26) | $6.7^{+0.08}_{-0.0}$ ($.264^{+.003}_{-.000}$) | $4.3^{+0.13}_{-0.0}$ ($.17^{+.005}_{-.000}$) | 9 (.35) Min. | 4.5 (.18) Min. |
| | | | | Prism | 56-111-000 | 56-110-000 | 9.9 (.39) | 13.6 (.54) | 9 (.354) | 14.3 (.56) | | | | | | |
| 1.52 (.06) | 3.81 (.15) | 8.2 (.32) | Small | Bright | 56-61-15 | 56-60-15 | 12.2 (.48) | 19.3 (.76) | 11.5 (.45) | 20.4 (.80) | 6.33 (.249) | 8.26 (.325) | $8.4^{+0.0}_{-0.1}$ ($.328^{+.003}_{-.000}$) | $6.4^{+0.1}_{-0.0}$ ($.250^{+.005}_{-.000}$) | 13 (.50) Min. | 8.26 (.325) Min. |
| | | | | Prism | 56-161-000 | 56-160-000 | 13 (.51) | 20 (.79) | 13.3 (.52) | 21.1 (.83) | | | | | | |
| | | | Large | Prism | 56-261-000 | 56-260-000 | 13 (.51) | 20 (.79) | 17 (.67) | 21.1 (.83) | | | | | | |

Dimensions in millimeters (inch) unless otherwise stated


southco® CONNECT · CREATE · INNOVATE

**Global Corporate Headquarters and Americas Customer Service & Technical Support Center**
Tel: (1) 610-459-4000 · Fax: (1) 610-459-4012 · www.southco.com · info@southco.com


INFO CLIC www.southco.com/56



# 56 Spring-Loaded Plunger

## Thread-in style

- **Simplified positioning of sliding components**
- **Quick-release hinge for removable door**
- **Fast installation and removal of components**

### Material and Finish

Knob: Aluminum

Stud: Low carbon steel, case hardened, zinc plated, chromate plus sealer

Shell and sleeve: Steel, zinc plated, chromate plus sealer

Spring: Stainless steel, passivated

Detent washer: Steel, zinc plated (Hold-open only)

### Part Number

See table

**300 Series**

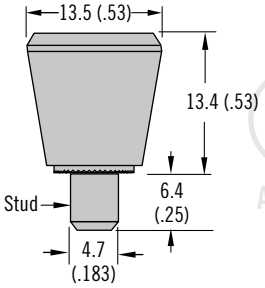


**400 Series**

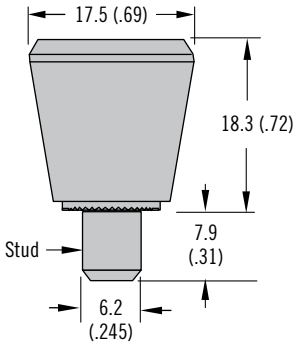


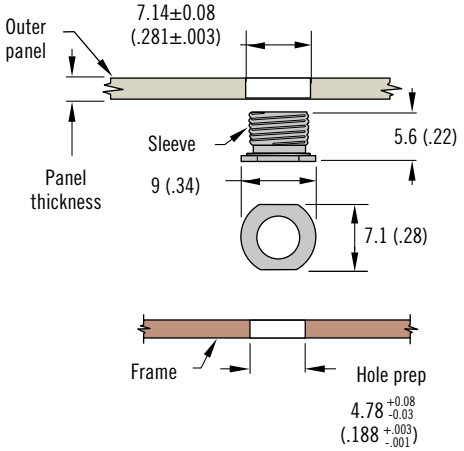


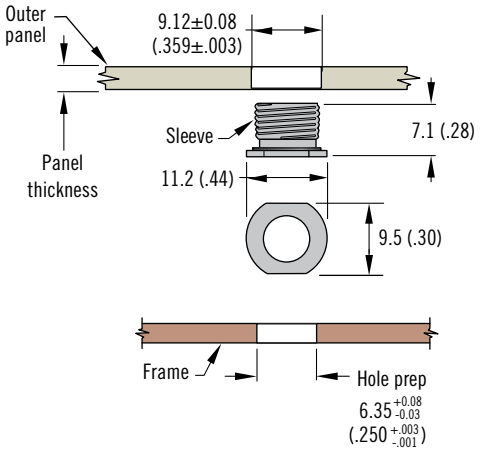


| Series | Panel Thickness | | Part Number | |
|---|---|---|---|---|
| | Min. | Max. | With Hold Open Feature | Without Hold Open Feature |
| **300** | 0.64 (.025) | 1.52 (.060) | 56-10-301-20 | 56-99-196-20 |
| **400** | 0.79 (.031) | 3.18 (.125) | 56-10-401-20 | 56-99-197-20 |

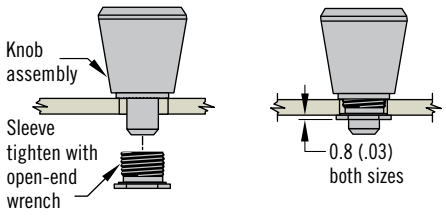


**Installation tool**

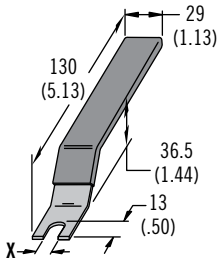


### Part Number

See table

| Series | X (Tool) | Tool Part Number |
|---|---|---|
| **300** | 7.1 (.28) | 56-0-22041-03 |
| **400** | 9.5 (.38) | 56-0-22041-04 |



Dimensions in millimeters (inch) unless otherwise stated

# Installation Guidelines

## for *SOUTHCO®* Self-Clinching products

**Self-clinching product installation is offered on these *SOUTHCO®* products, making them easy-to-use captive panel fasteners:**

- **Captive Screws**
- **Receptacles for Quarter-turn Fasteners**
- **Receptacles for Fast-lead Thread Screws**
- **Spring-loaded Plungers**
- **Captive Nuts**
- **Threaded Inserts**

When pressed into a properly prepared hole, self-clinching captive fasteners cold-flow (move) the panel material into the retaining groove of the fastener. This material then retains the fastener in the panel.

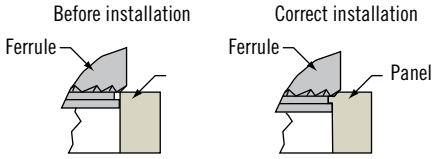


### Successful press-in installations depend on:

**Material:**

The hardness of the panel material must not exceed *SOUTHCO®* recommendations. If the panel is too hard, the fastener will not install correctly.

**Installation Holes:**

Mounting holes may be drilled, punched, or cast.

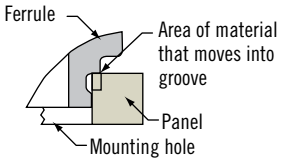


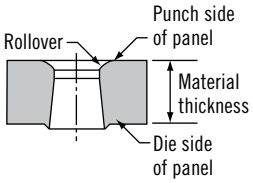


- Hole edge: the top hole edge must be sharp but with no broken edges. Do not chamfer or debur edge.
- Punched holes: use a punch and die with a small clearance to minimize the rollover and fracture angle.
- Hole diameter: measure the hole diameter at the panel surface on the side on which the fastener will be installed. The diameter must be within *SOUTHCO®* specifications for that product.
  - If the hole is too large, not enough material will flow into the retaining groove and the fastener may not be retained adequately.
  - If the hole is too small, the fastener will not fit and installation may become difficult and unsafe.
- Hole distance from the edge of panel: the minimum recommended distance is 1.5 x the diameter of the mounting hole, unless otherwise indicated.
  - Installing too close to the edge will cause the material to flow in the opposite direction, deforming the edge of the panel. To install closer to the edge, you may need to restrain the panel edge.

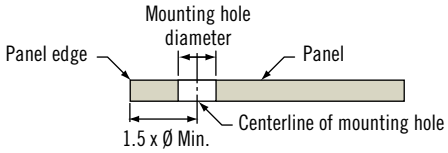


**Panel Thickness:**

The thickness of the panel at the mounting hole location must meet or exceed Southco's stated minimum recommendations.
If the material is too thin, panel deformation and/or damage to the fastener may result.

### Installation is fast and easy if you follow these tips:

How to install: Use the recommended force where noted and a proper back-up tool.

- use any parallel-acting press
- use a punch whose diameter is larger than the head of the fastener

Installation Force: Proper installation requires an even distribution of adequate force. It does not depend on the distance the fastener is pressed into the panel.

- Southco does not recommend using a hammer. The impact force does not provide an even distribution of force to allow the panel material to completely flow into the fastener's retaining groove.
- Installation force varies from application to application, depending on the criteria noted above.
- On parts without a collar to provide a hard stop, press-in until the edge of the knurl is just barely visible.

**When to Install:**

Installation is recommended after plating or finishing has been applied to the panel.

The hole diameter must meet specifications before finish or plating is applied.

- Do not over-install parts. This interupts the material and will reduce the retention strength.

