EVC917

Connection cable

VSTAN040MSS0,25K04STAN040MSS

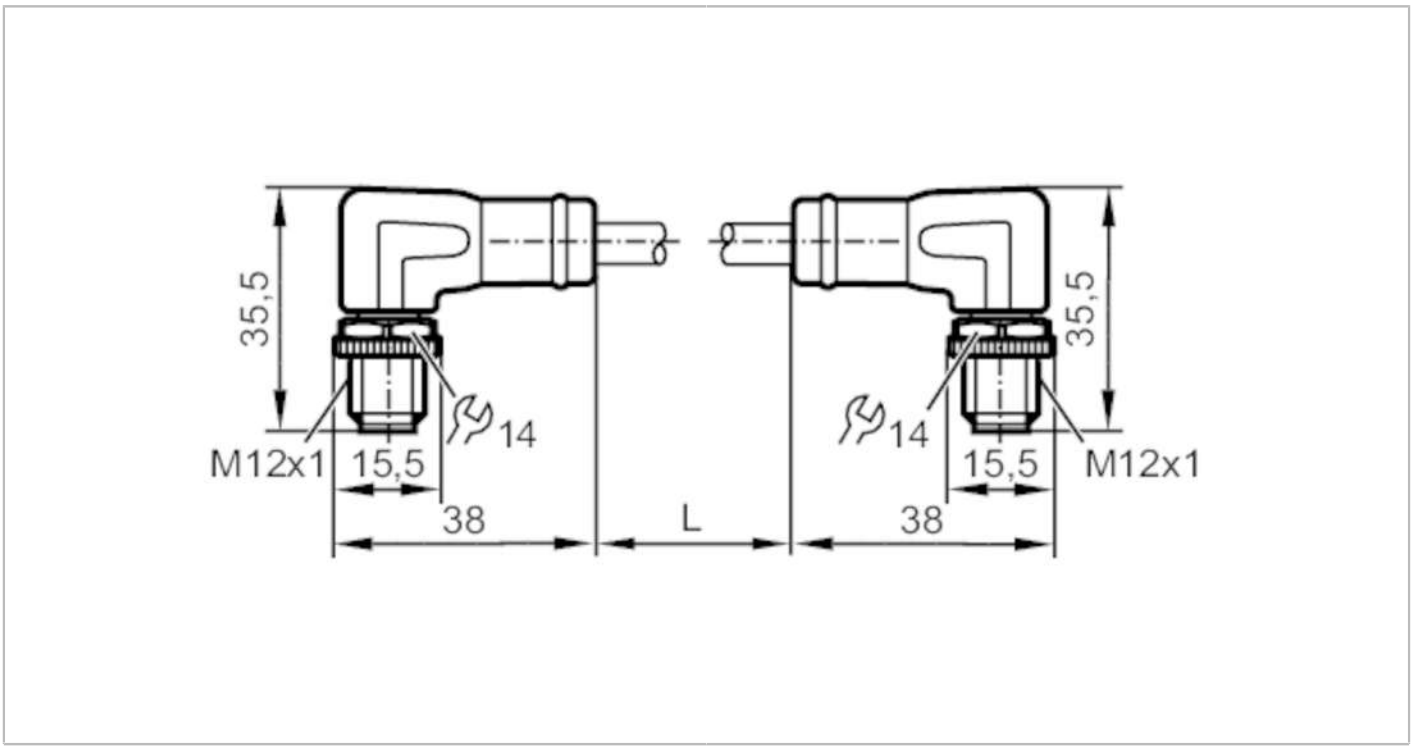

Application		
Special feature		Free from silicone; Halogen-free; Gold-plated contacts; Screened cable; Drag chain suitability
Design		Ethernet cable, D-coded
Application		Industrial Ethernet; CAT5/CAT5e; 100 Mbit/s; Industrial applications / factory automation
Free from silicone		yes
Electrical data		
Operating voltage	[V]	30 AC / 60 DC
Protection class		III
Max. current load total	[A]	4
Operating conditions		
Ambient temperature	[°C]	-25...90
Ambient temperature (moving)	[°C]	-25...90
Protection		IP 65; IP 67
Mechanical data		
Weight	[g]	78.8
Moulded-body material		TPU
Material nut		brass, nickel-plated
Drag chain suitability		yes
Drag chain suitability	bending radius for flexible use	min. 10 x cable diameter
	travel speed	max. 3.3 m/s for a horizontal travel length of 5 m and max. acceleration of 5 m/s²
	bending cycles	> 3 Mio.
	torsional strain	± 180 °/m

EVC917

Connection cable

VSTAN040MSS0,25K04STAN040MSS

Remarks

Pack quantity	1 pcs.

Electrical connection - plug

Connector: 1 x M12, angled; coding: D; Moulded body: TPU, black; Locking: brass, nickel-plated; Contacts: gold-plated; Tightening torque: 0.6...1.2 Nm; Shielded connection cable: screen connected

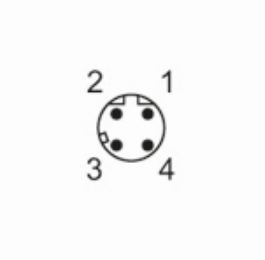

Electrical connection

Cable: 0.25 m, PUR, Halogen-free, green, Ø 6.5 mm, shielded; PROFINET Type C; 4 x 0.34 mm² (7 x Ø 0.25 mm)

Connection

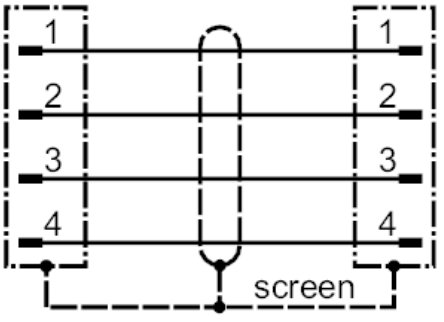

Electrical connection - plug

Connector: 1 x M12, angled; coding: D; Moulded body: TPU, black; Locking: brass, nickel-plated; Contacts: gold-plated; Tightening torque: 0.6...1.2 Nm; Shielded connection cable: screen connected

