efector200

OO5001

OOF-FPKG/M12/KL4

Photoelectric sensors

Please note the wiring of the sensor and the sockets (see data sheet) as for 8-pole sockets the core colours are not standardised.

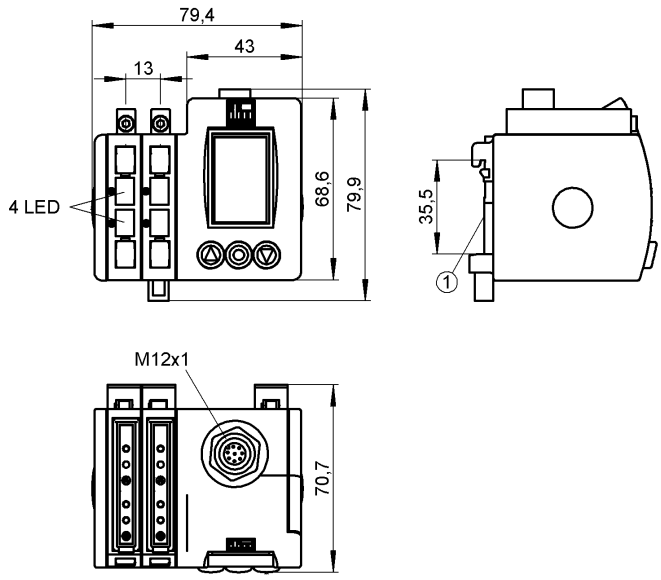

1: Mounting on DIN rail

Product characteristics

Fibre-optic amplifier
Plastic housing
Connector
4 channels for 4 plastic fibre optics Types FE-11 / FT-11
No mutual optical interference
Graphic display
Central operation
Electronic lock
Function check output
Sensing range 3800mm (Through-beam sensor)
Range 0...300mm (Diffuse reflection sensor)
adjustable

Electrical data

Electrical design		DC PNP
Operating voltage	[V]	12...36 DC
Current consumption	[mA]	50 (24 V)
Power consumption	[VA]	1.2
Type of light		Red light 630 nm
Protection class		III
Reverse polarity protection		yes

Outputs

Output function		light-on / dark-on programmable
Voltage drop	[V]	< 2
Current rating		
- Switching output	[mA]	200

- Function check output	[mA]	200
Short-circuit protection		pulsed
Overload protection		yes
Switching frequency	[Hz]	1500 typ.
Timer	[s]	0.001...0.1
Range		
Sensing range	[m]	3.8 (Through-beam sensor)
Range	[mm]	0...300 (Diffuse reflection sensor)
Measuring / setting range		
Possible settings		- automatic and manual switch point setting - logic functions AND; OR - second switch point
Environment		
Ambient temperature	[°C]	-20...60
Protection		IP 65
Tests / approvals		
EMC		EN 60947-5-2 EN 55011: class B
Mechanical data		
Housing materials		housing: ABS; display window: PMMA; LED window: SEPS; cover: diecast zinc plastic coated (PA)
Weight	[kg]	0.494
Displays / operating elements		
Display		Display unit full graphic LCD display Switching status 4 x LED yellow
Display options		- display can be rotated by 180° - language selection (German, English, French)
Electrical connection		
Connection		M12 connector

Wiring

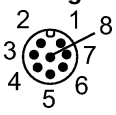

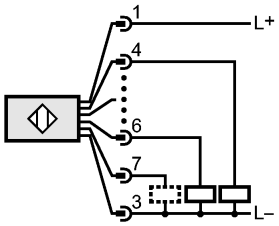

4: Out 1
2: Out 2
5: Out 3
6: Out 4

7: function check

Accessories		
Accessories (included)		DIN rail EN60715; length: 68 mm
Remarks		
Remarks		cULus - Class 2 source required
Pack quantity	[piece]	1

Please note the wiring of the sensor and the sockets (see data sheet) as for 8-pole sockets the core colours are not standardised.