

The third generation Squashni G3 amalgamates the best features from the previous Squashni and Squashni Micro versions. The large flat surface allows the mounting of a large range of European detectors, while the high efficiency and low operating current permit compatibility with many systems.

## Features

- Universal detector platform
- First fix base
- Low current consumption
- Tamper proof cap option

## Benefits

- Fits the majority of detectors for increased flexibility
- Speeds up installation
- Maximises the number of devices on a system
- For use without a detector

## Technical Specification

| | |
|---|---|
| **Voltage** | 18 - 28Vdc |
| **Current** | 4/5mA |
| **Sound Output** | 90dB(A) |
| **Tones** | 8 |
| **Volume Control** | 10dB |
| **Monitoring** | Reverse polarity |
| **Temperature** | - 10°C to + 55°C |
| **Protection** | IP21C |
| **Construction** | ABS |
| **Weight** | 0.16Kg |
| **Colours** | White |

## Dimensions

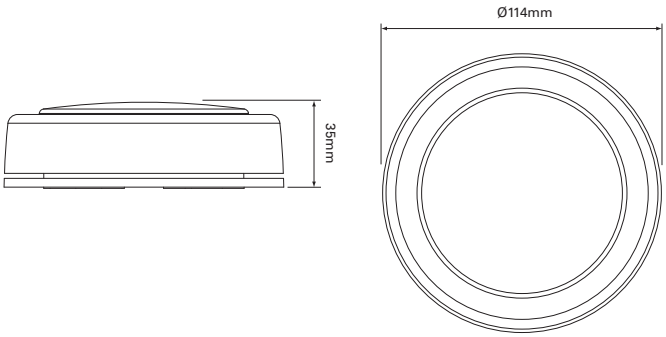


## Catalogue Numbers

| Reference | Cat No | Description |
|---|---|---|
| SQG3/SDR/W | 666058FULL-0098X | Squashni G3 Sounder white |

VdS