E20788

Angle bracket

ANGLE BRACKET OL SMALL

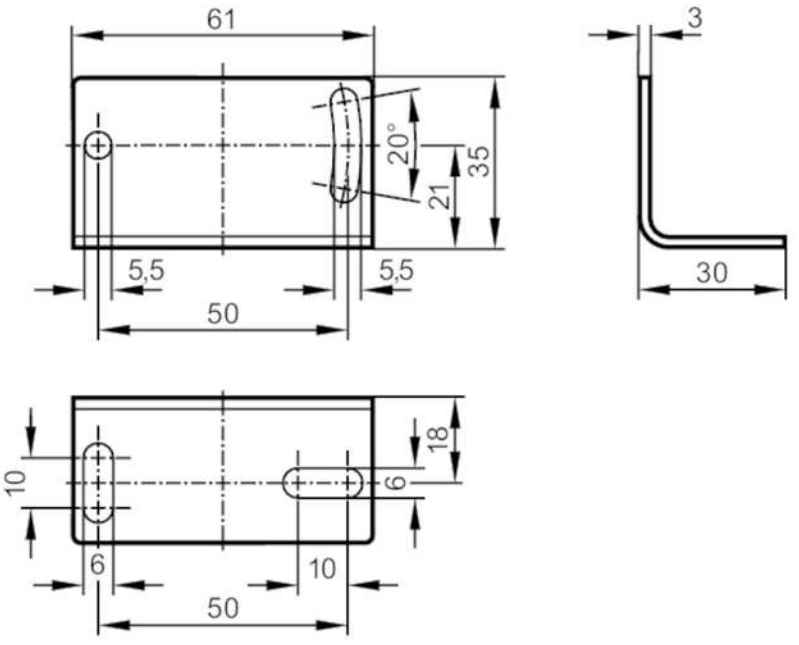

Application		
Design		for type OL
Mechanical data		
Weight	[g]	102.5
Dimensions	[mm]	35 x 61 x 30
Materials		stainless steel (1.4301 / 304)
Accessories		
Items supplied		screws: 2 x M5 x 30
		Nuts: 2
		spring washers: 2
Remarks		
Pack quantity		1 pcs.