Product datasheet
Characteristics

XZCE11P124M
adaptor, plastic - tapped hole Pg 11 - for male connector, M12, 4-wire

Price* : 18.25 GBP



Main

Accessory / separate part designation	4-wire connector adaptor
Accessory / separate part category	Cabling accessories
Accessory / separate part type	Connector adaptor
Cable composition	4 x 0.34 mm²
Thread type	Pg 11
[In] rated current	4 A

Complementary

Cable length	100 mm
Total number of wires	4
Electrical connection	1 male connector M12 5 straight
Cable connector fixing	Screw-on
Body material	Plastic
Insulation resistance	> 1000000000 Ohm
Resistance across terminals	<= 5000 mOhm
[Ue] rated operational voltage	250 V AC 300 V DC
Product weight	0.02 kg

Environment

IP degree of protection	IP67
Ambient air temperature for operation	-25...80 °C

Offer Sustainability

RoHS (date code: YYWW)	Compliant - since 0545 - Schneider Electric declaration of conformity Schneider Electric declaration of conformity

Contractual warranty

Warranty period	18 months

Disclaimer: This documentation is not intended as a substitute for and is not to be used for determining suitability or reliability of these products for specific user applications

XZCE11P124M

Dimensions

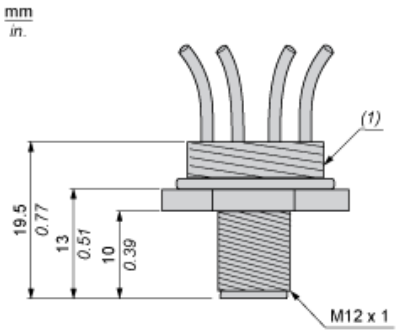

(1) Pg 11 cable gland

XZCE11P124M

Connections and Schemes

Connector

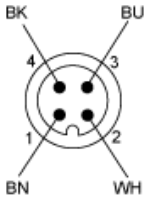

BN : Brown
BK : Black
BU : Blue
WH : White