IG6616

Inductive sensor with IO-Link

IGK3012-FRKG/IO/US-104

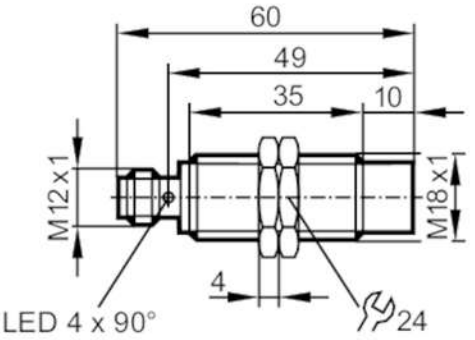

Made in Germany

Electrical data		
Operating voltage	[V]	10...30 DC
Current consumption	[mA]	10
Protection class		III
Reverse polarity protection		yes
Outputs		
Output function		normally open / normally closed; (selectable)
Max. voltage drop switching output DC	[V]	2.5
Permanent current rating of switching output DC	[mA]	100
Switching frequency DC	[Hz]	300
Electrical design		PNP/NPN
Short-circuit protection		yes
Overload protection		yes
Range		
Measuring range	[mm]	1.3...13
Accuracy / deviations		
Correction factor		steel: 1 / stainless steel: 0.8 / brass: 0.5 / aluminium: 0.5 / copper: 0.4
Hysteresis	[% of Sr]	3...15
Linearity error of analogue output	[%]	± 2 %; (of the final value of the measuring range)
Repeatability analogue output	[%]	± 1 %; (of the final value of the measuring range)
Temperature coefficient		± 10 %; (-25...70 °C ± 20 %, -40...85 °C; of the final value of the measuring range)

IG6616

Inductive sensor with IO-Link

IGK3012-FRKG/IO/US-104

Interfaces			
Communication interface		IO-Link	
Transmission type		COM2 (38,4 kBaud)	
IO-Link revision		1.1	
SDCI standard		IEC 61131-9 CDV	
IO-Link device ID		791d / 000317h	
Profiles		Smart Sensor: Device Identification; Device Diagnosis; Device Teach Channel; Binary Data Channel; Process Data Variable	
SIO mode		yes	
Required master port type		A	
Min. process cycle time	[ms]	3	
Operating conditions			
Ambient temperature	[°C]	-40...85	
Protection		IP 65; IP 66; IP 67; IP 68; IP 69K	
Tests / approvals			
EMC		EN 61000-4-2 ESD	4 kV CD / 8 kV AD
		EN 61000-4-3 HF radiated	10 V/m
		EN 61000-4-4 Burst	2 kV
		EN 61000-4-6 HF conducted	10 V
		EN 55011	class B
Vibration resistance		EN 60068-2-6 Fc	20 g (10...3000 Hz) / 50 sweep cycles per frequency; 1 octave per minute in 3 axes
Shock resistance		EN 60068-2-27 Ea	100 g 11 ms half-sine; 3 shocks each in every direction of the 3 coordinate axes
Continuous shock resistance		EN 60068-2-29 Eb	40 g 6 ms; 4000 shocks each in every direction of the 3 coordinate axes
Fast temperature changes		EN 60068-2-14 Na	TA = -40 °C; TB = 85 °C; t1 = 30 min; t2 = < 10 s; 50 cycles
MTTF	[years]	664	
UL Approval no.		A008	
Mechanical data			
Weight	[g]	47.8	
Housing		threaded type	
Mounting		non-flush mountable	
Dimensions	[mm]	M18 x 1 / L = 60	
Thread designation		M18 x 1	
Materials		brass white bronze coated; sensing face: PBT orange; LED window: PEI; lock nuts: brass white bronze coated	
Displays / operating elements			
Display		switching status	4 x LED, yellow
		SIO mode	
		output stage supplied with current	LED, yellow lights
		IO-Link mode	
		target in measuring range	LED, yellow lights
		target outside measuring range	LED, yellow flashing
Accessories			
Accessories (supplied)		lock nuts: 2	

IG6616

Inductive sensor with IO-Link

IGK3012-FRKG/IO/US-104

Remarks

Pack quantity	1 pcs.

Electrical connection

Connector: 1 x M12

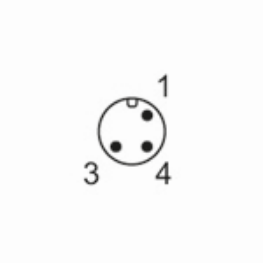

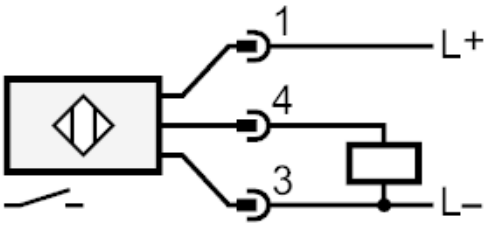

4: OUT / IO-Link