Brand of NTN corporation

Technical data

ESEHE.205

Bearing units



Grey cast housing, radial insert ball bearing with eccentric locking collar, single lip seal

KIT CONTENT

ES205G2, EHE205

VISUAL (S)

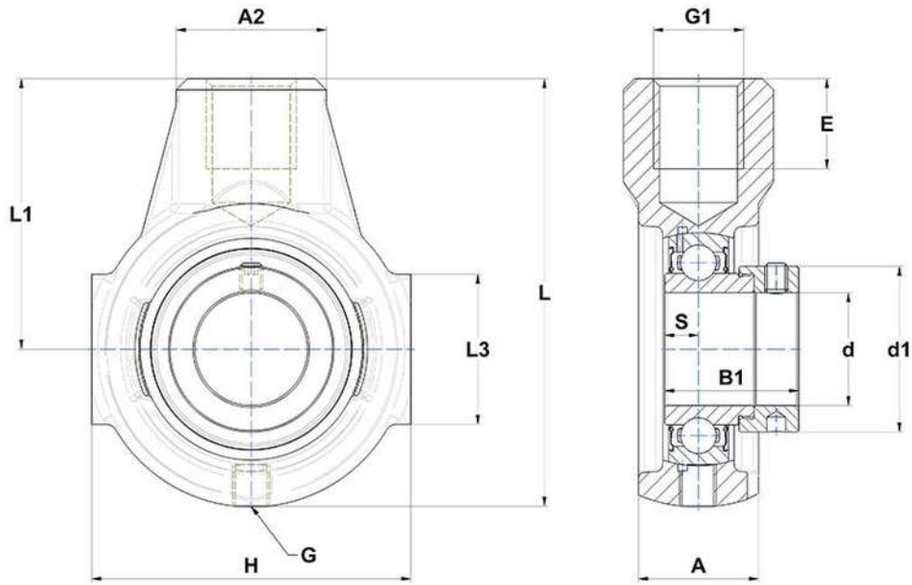

PRODUCT DEFINITION

Brand	SNR
A - Housing width	28 mm
A2	35 mm
B1 - Overall width Inner Ring	30,9 mm
d - Shaft diameter	25 mm
d1 - Outer dia of eccent. Lock. collar / nut of adapter sleeve	37,4 mm

PRODUCT DEFINITION	
E - Mounting hole thread depth	22 mm
G - Grease fitting	R1/8"
G1 - Thread size	M20
H - Housing length, width or diameter	70 mm
L - Housing length	99 mm
L1 - Distance attachment end face to bearing centerline	64 mm
L3 - Length of guidance slot/face	38 mm
S - Distance front side/bearing centre	7,5 mm

PRODUCT PERFORMANCE	
C - Dynamic load rating	14000000 mN
C0 - Static load rating	7880000 mN
Operating temperature min.	253,15 °K
Operating temperature max.	373,15 °K

OTHER FEATURES	
Mass	0,69 kg
Recommended tightening torque for set screw	5.5 N-m