OGH308

Diffuse reflection sensor with background suppression

OGH-HPKG/6M

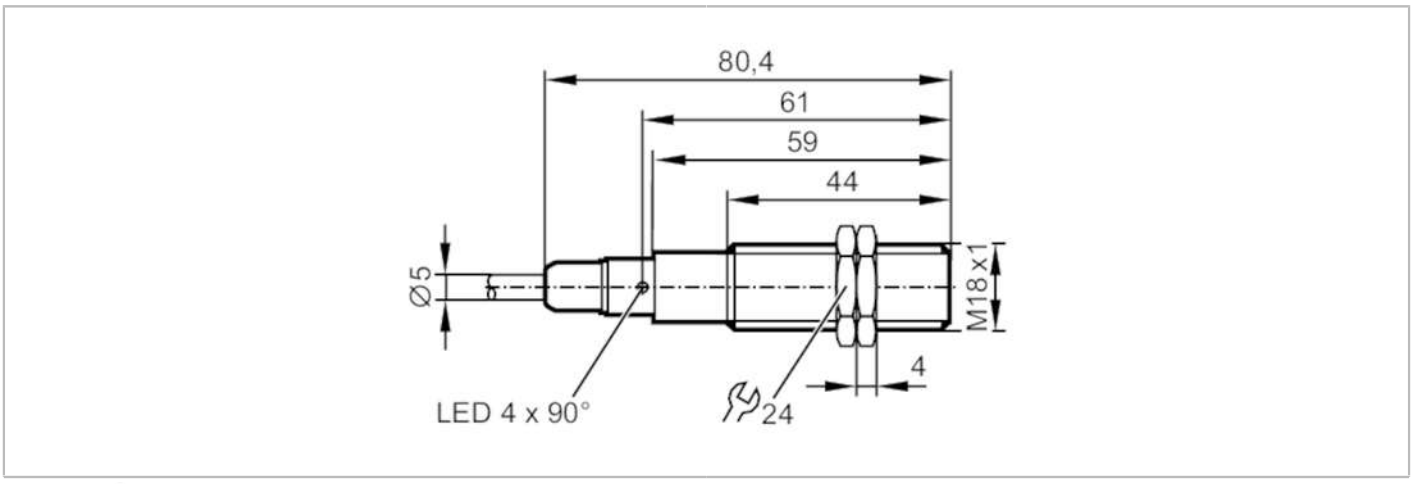

Product characteristics		
Type of light		red light
Housing		threaded type
Application		
Special feature		Background suppression
Function principle		Diffuse reflection sensor
Electrical data		
Operating voltage	[V]	10...36 DC
Current consumption	[mA]	25
Protection class		II
Reverse polarity protection		yes
Type of light		red light
Outputs		
Electrical design		PNP
Output function		light-on mode
Max. voltage drop switching output DC	[V]	2.5
Permanent current rating of switching output DC	[mA]	150; (200 (...60 °C))
Switching frequency DC	[Hz]	1000
Short-circuit protection		yes
Type of short-circuit protection		pulsed
Overload protection		yes
Detection zone		
Range	[mm]	< 200; (white paper 200 x 200 mm 90% remission)
Range on white object (90 % remission)	[mm]	< 200
Range on grey object (18 % remission)	[mm]	< 200
Range on black object (6 % remission)	[mm]	< 190

OGH308

Diffuse reflection sensor with background suppression

OGH-HPKG/6M

Range adjustable		no
Max. light spot diameter [mm]		17
Light spot dimensions refer to		Range
Background suppression available		yes
Operating conditions		
Ambient temperature [°C]		-25...80
Protection		IP 65; IP 67; IP 68; IP 69K
Tests / approvals		
EMC	EN 60947-5-2	
MTTF [years]		372
Mechanical data		
Weight [g]		265
Housing		threaded type
Dimensions [mm]		M18 x 1 / L = 80.4
Thread designation		M18 x 1
Materials		housing: stainless steel (316L/1.4404); Sealing: EPDM
Lens material		PMMA
Displays / operating elements		
Display	switching status	1 x LED, yellow
Accessories		
Items supplied		lock nuts: 2
Remarks		
Remarks		operating voltage "supply class 2" according to cULus
Pack quantity		1 pcs.
Electrical connection		

Cable: 6 m, PVC; 3 x 0.34 mm²

Connection

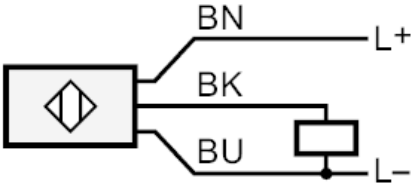

	Core colours :
BK =	black
BN =	brown
BU =	blue