ROLEC®

Our passion is enclosures.



starCASE

Premium plastic enclosures made of LURAN®

Technical data
starCASE



Integrated
lid support



Enclosure can be installed
after closing



Sealing set



Integrated design covers for
screwless appearance



Fixing points for circuit boards,
DIN rails, etc.



Access safeguard by
means of insert lock



Integrated recess
for membrane keypads

Enclosure: Thermoplastic ASA LURAN® S, V0. 2° mould slope for casting ejection, internal measures diminishing circulatory towards enclosure bottom by 2°.

Flammability: UL 94 V-0 1.5mm

Integrated recess: In the lid for membrane keypad or front plates

Components: Mounting dome for self-grooving fastener in the lid and bottom.

Ingress Protection: IP66 / EN 60529

Gasket: Silicone moulded gasket (-40°C to +120°C)

Lid screws: Stainless steel 1.4567 (V2A), captive

Design covers: Latching, ASA LURAN® S, V0, in RAL 7035, light grey.

Integrated lid support: Plastic polypropylene (PP)

Surface: RAL 7035, light grey

Optionally available:

Gasket: EMC gasket (-55°C to +160°C)

EMC shielding: Aluminium (high vacuum) vapor-blast process 2.5µm

Surface: Special material on request

Further options, see delivery overview.

Delivery overview starCASE											
Type	Mat. no.	L	W	H	D	E	g	ID	EMC	ST	P
SC 090	230.090.000	120	90	50	99	34	155	❑	●	●	●
SC 092	230.092.000	160	90	50	139	34	191	❑	●	●	●
SC 110	230.110.000	140	110	60	119	54	232	❑	●	●	●
SC 112	230.112.000	200	110	60	179	54	346	❑	●	●	●
SC 130	230.130.000	160	130	60	139	74	277	❑	●	●	●
SC 150	230.150.000	180	150	60	159	94	350	❑	●	●	●
SC 172	230.172.000	280	170	60	259	114	531	❑	●	●	●

❑ Standard ● Available ○ Not available

Approvals:



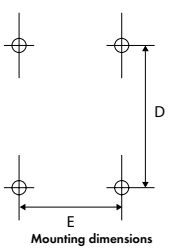

Mounting dimensions



ROLEC Attachment and mounting dimensions

starCASE

SC 090

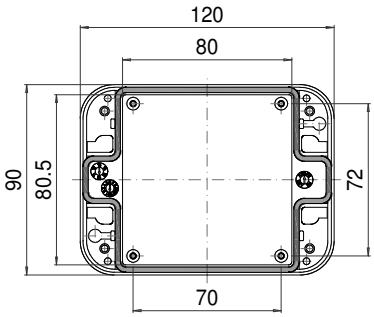

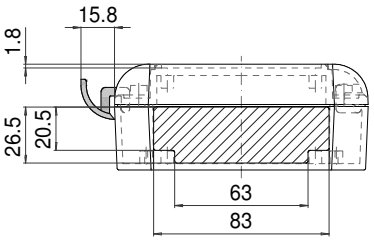

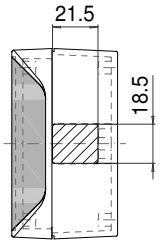

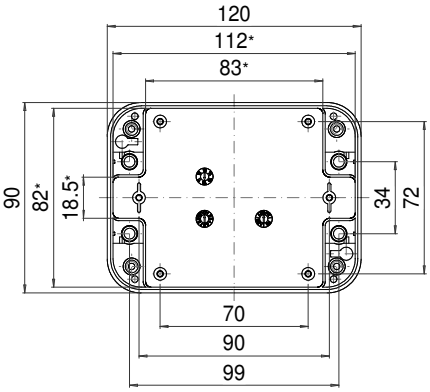

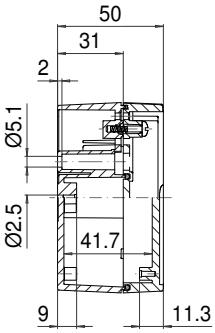

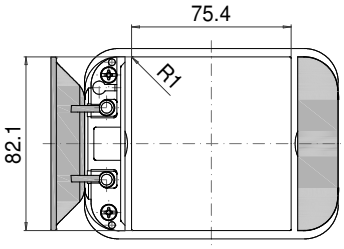

Folie/ Keypad
81.9 $^{+0}_{-0.2}$ x 75.2 $^{+0}_{-0.2}$

* Please note: Mould slope for moulding ejection, dimensions in the amount of the bottom!

SC 092

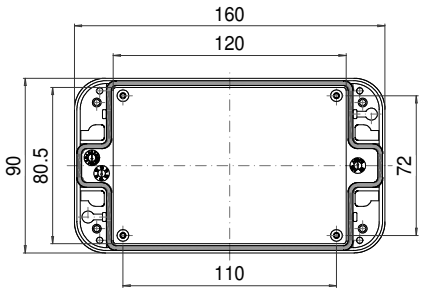

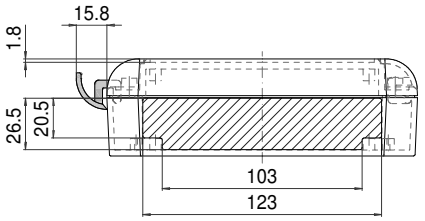

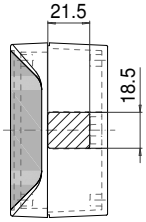

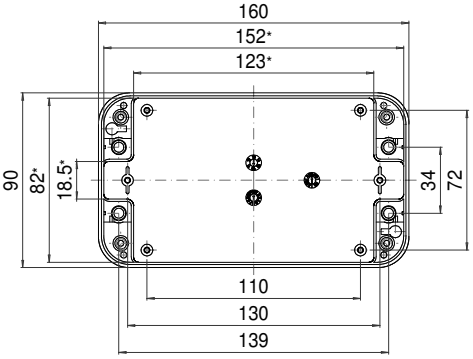

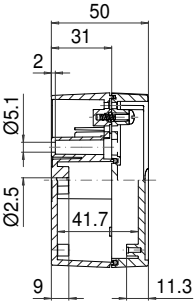

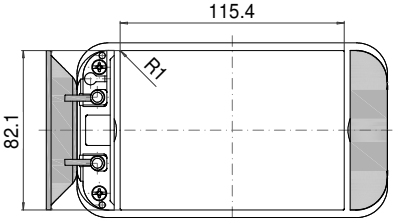

Folie/ Keypad
81.9 $^{+0}_{-0.2}$ x 115.2 $^{+0}_{-0.2}$

* Please note: Mould slope for moulding ejection, dimensions in the amount of the bottom!

SC 110

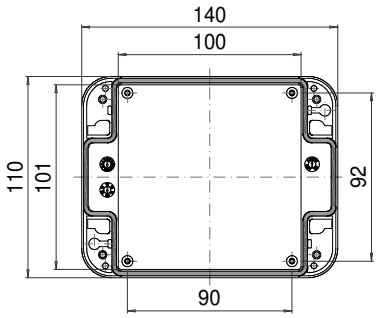

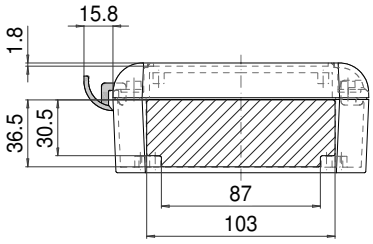

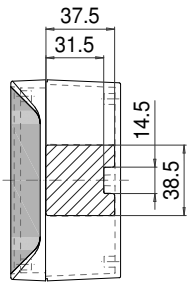

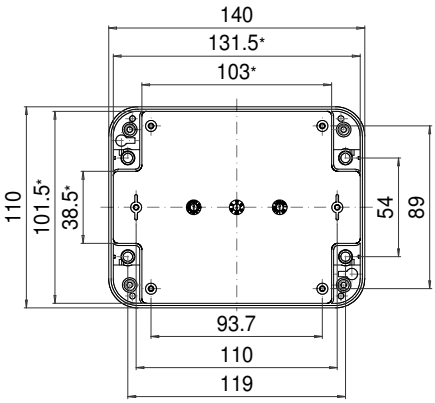

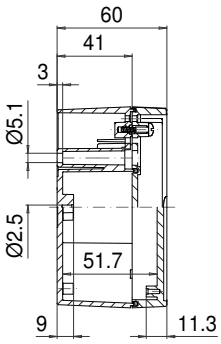

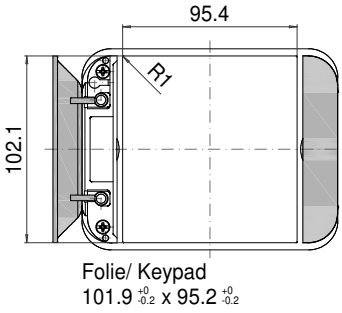

* Please note: Mould slope for moulding ejection, dimensions in the amount of the bottom!

SC 112

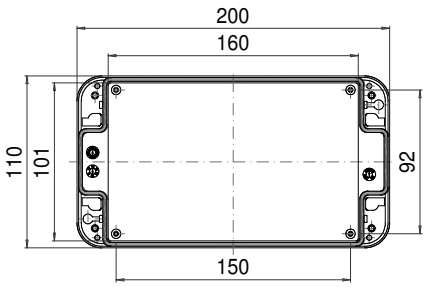

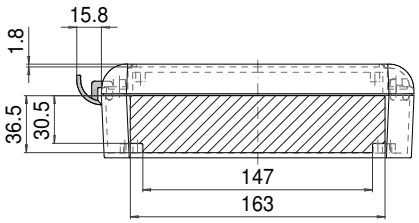

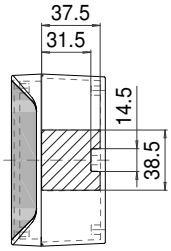

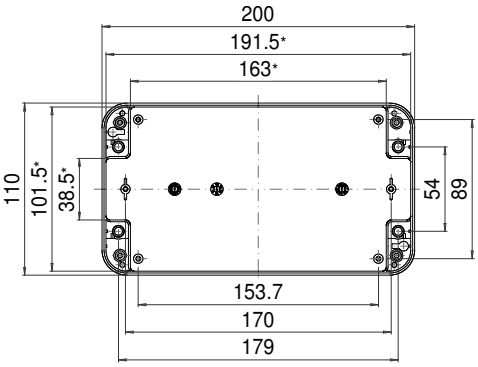

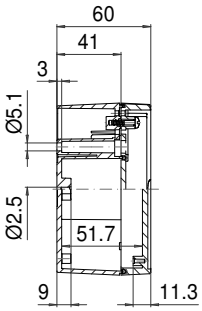

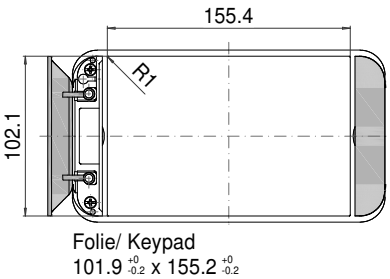

* Please note: Mould slope for moulding ejection, dimensions in the amount of the bottom!

ROLEC Attachment and mounting dimensions

starCASE

SC 130

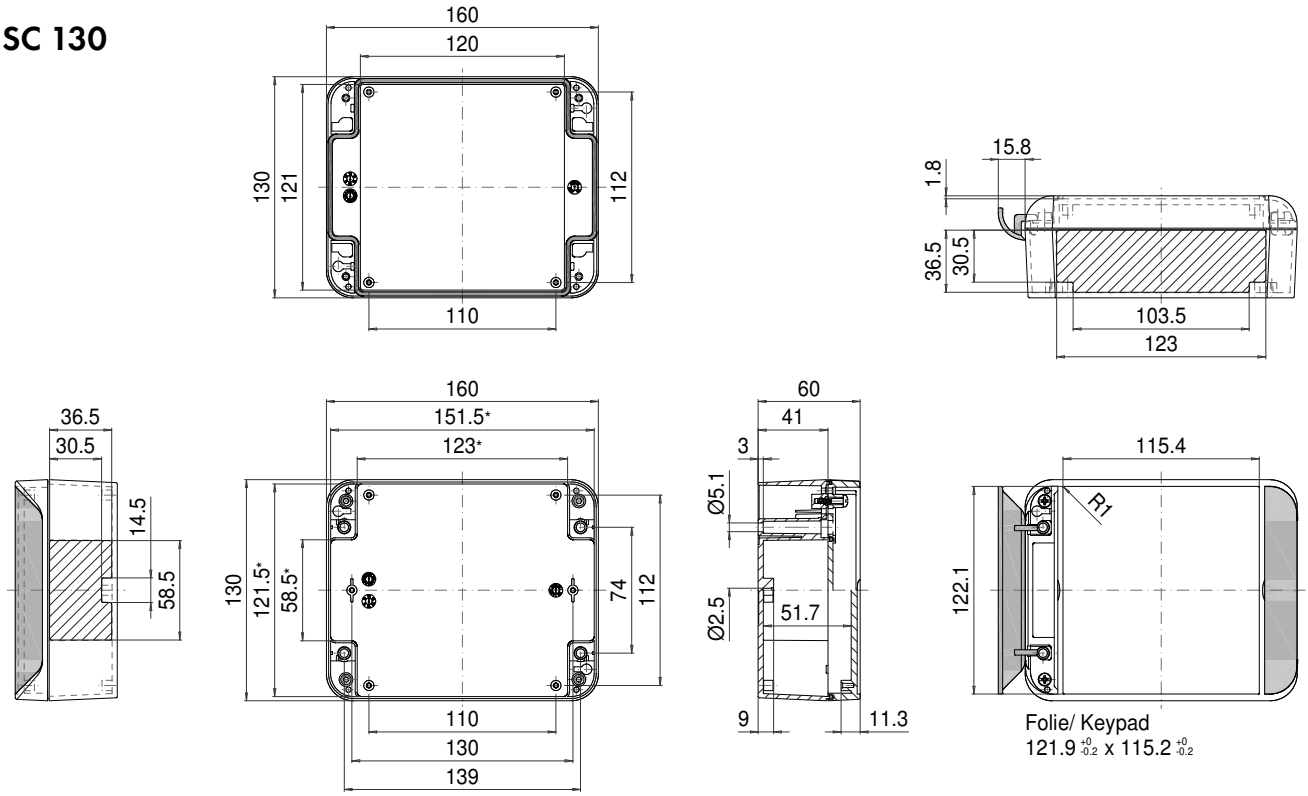

* Please note: Mould slope for moulding ejection, dimensions in the amount of the bottom!

SC150

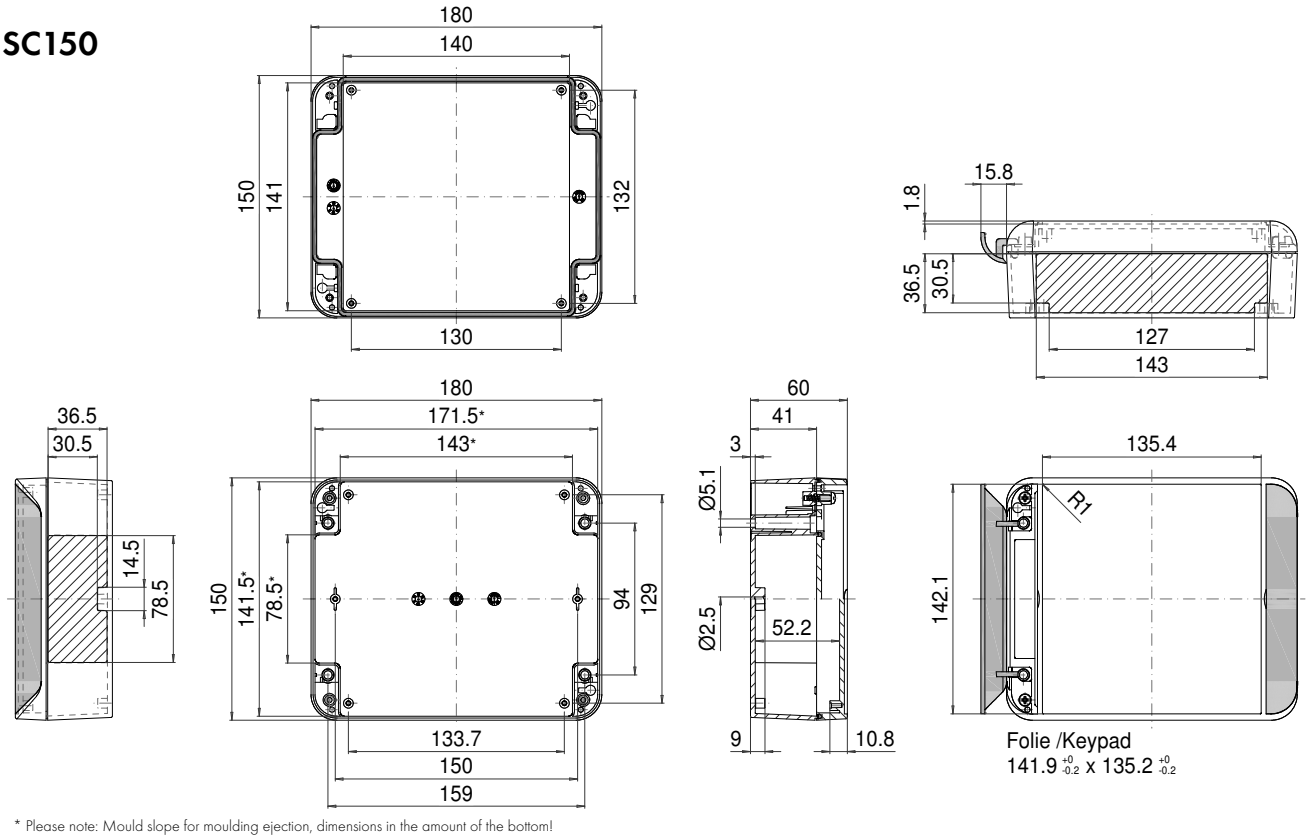

* Please note: Mould slope for moulding ejection, dimensions in the amount of the bottom!

SC 172

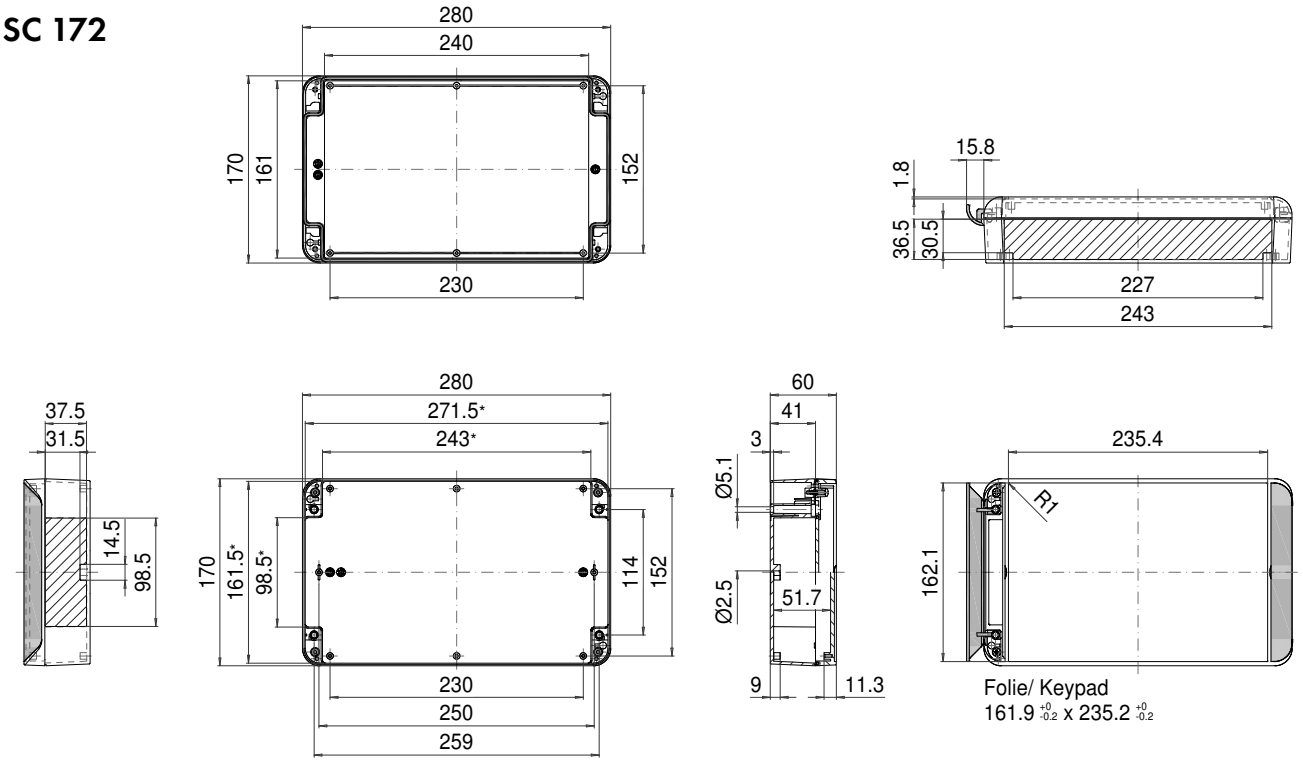

* Please note: Mould slope for moulding ejection, dimensions in the amount of the bottom!