IN0131

Inductive sensor

INE2004DABOA

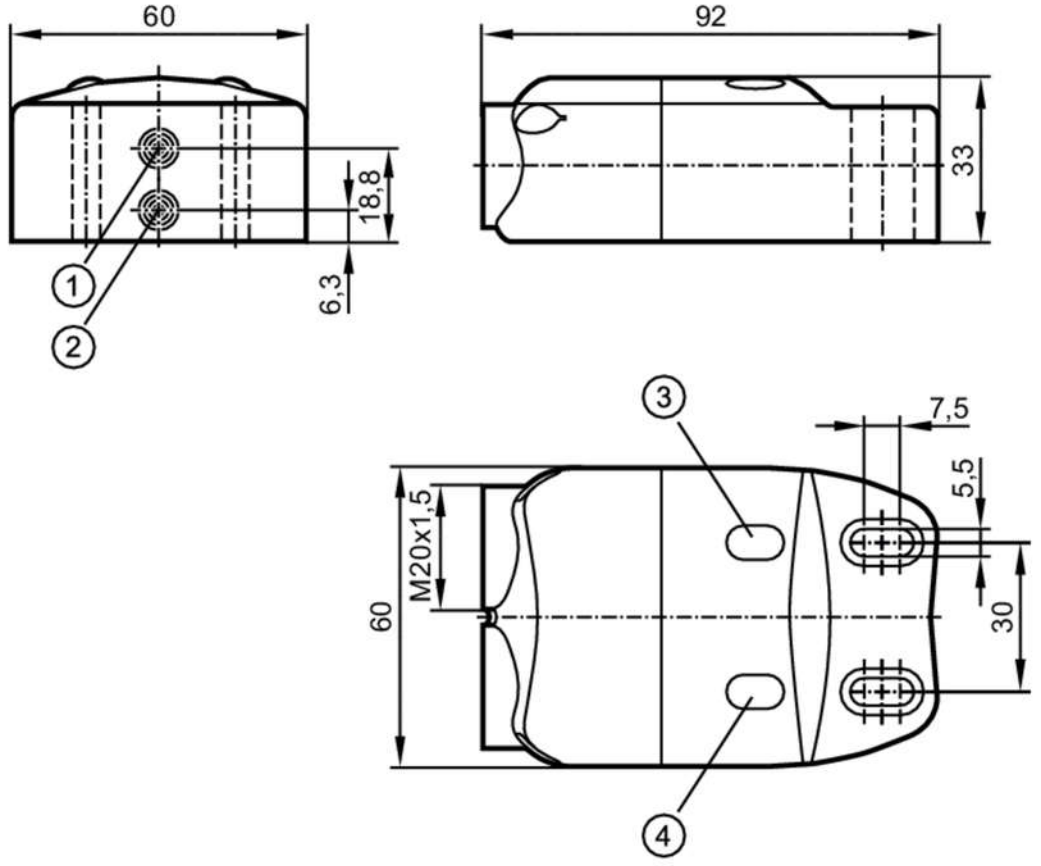

1 sensor 1
2 sensor 2
3 LED OUT 2
4 LED OUT 1

Product characteristics		
Output function		2 x normally open
Sensing range	[mm]	4
Housing		rectangular
Dimensions	[mm]	33 x 60 x 92
Electrical data		
Frequency AC	[Hz]	47...63
Operating voltage	[V]	20...250 AC/DC
Current consumption	[mA]	< 15
Protection class		II
Reverse polarity protection		yes
Outputs		
Output function		2 x normally open
Max. voltage drop switching output DC	[V]	6
Max. voltage drop switching output AC	[V]	6.5

IN0131

Inductive sensor

INE2004DABOA

Minimum load current	[mA]	5	
Max. leakage current	[mA]	2.5 (250 V AC) / 1.3 (110 V AC) / 0.8 (24 V DC)	
Permanent current rating of switching output AC	[mA]	250; (350 (...50 °C))	
Permanent current rating of switching output DC	[mA]	100	
Short-time current rating of switching output	[mA]	2200; (20 ms / 0,5 Hz)	
Switching frequency AC	[Hz]	25	
Switching frequency DC	[Hz]	50	
Short-circuit protection		no	
Overload protection		no	
Detection zone			
Sensing range	[mm]	4	
Real sensing range Sr	[mm]	4 ± 10 %	
Operating distance	[mm]	0...3.25	
Accuracy / deviations			
Correction factor		steel: 1 / stainless steel: 0.7 / brass: 0.5 / aluminium: 0.4 / copper: 0.3	
Hysteresis	[% of Sr]	1...15	
Switch point drift	[% of Sr]	-10...10	
Operating conditions			
Ambient temperature	[°C]	-25...70	
Protection		IP 67	
Tests / approvals			
EMC		EN 60947-5-2	
MTTF	[years]	307	
UL approval		Ta	-25...70 °C
		Enclosure type	Type 1
		File number UL	E174191
Mechanical data			
Weight	[g]	168.05	
Housing		rectangular	
Mounting		non-flush mountable	
Dimensions	[mm]	33 x 60 x 92	
Materials		housing: PA	
Displays / operating elements			
Display		switching status	2 x LED, yellow
Electrical connection			
Required protection		miniature fuse to IEC60127-2 sheet 1; ≤ 2 A; fast acting	
Accessories			
Items supplied		washers: 2	
		cylinder screws: 2 x (M5 x 18 mm)	
Remarks			
Remarks		Recommendation: Check the safe functioning of the unit after a short circuit.	
Pack quantity		1 pcs.	

IN0131

Inductive sensor

INE2004DABOA

Electrical connection

terminal strip in the terminal chamber:

Connection

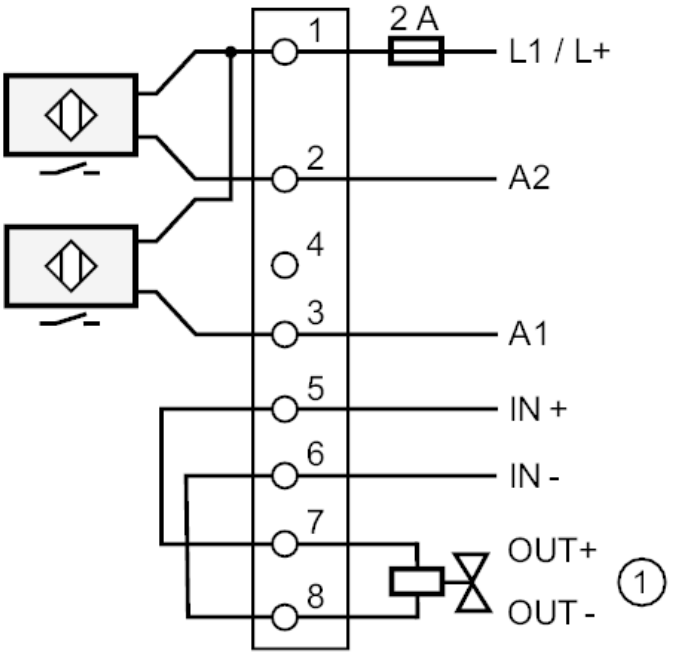

	Note miniature fuse to IEC60127-2 sheet 1 ≤ 2 A fast acting
1	output solenoid valve