Product data sheet

Specifications



pressure switch XMLA 300 bar - fixed scale 1 threshold - 1 C/O

XMLA300N2S11

Main

Range of product	Telemecanique Pressure sensors XM
Product or component type	Electromechanical pressure sensor
Pressure sensor type	Electromechanical pressure sensor
Device short name	XMLA
Pressure rating	300 bar
Controlled fluid	Air (0…160 °C) Corrosive fluid (0…160 °C)
Fluid connection type	G 1/4 (female) conforming to ISO 228
Electrical connection	Screw-clamps terminals, 1 x 0.5...2 x 2.5 mm²
AWG gauge	AWG 20...AWG 14
Cable entry	Cable gland 9…13 mm
Contacts type and composition	1 C/O
Product specific application	-
Pressure switch type of operation	Detection of 1 single threshold
Electrical circuit type	Control circuit
Scale type	Fixed differential
Local display	With
Adjustable range of switching point on rising pressure	20…300 bar
Adjustable range of switching point on falling pressure	3.5…265 bar
Maximum permissible accidental pressure	675 bar
Destruction pressure	1350 bar
Pressure actuator	Piston
Materials in contact with fluid	FPM, FKM PTFE 316L stainless steel
Enclosure material	Zinc alloy
[In] rated current	3 A, B300, AC-15 (Ue = 120 V) conforming to EN/IEC 60947-5-1 1.5 A, B300, AC-15 (Ue = 240 V) conforming to EN/IEC 60947-5-1 0.1 A, R300, DC-13 (Ue = 250 V) conforming to EN/IEC 60947-5-1

Disclaimer: This documentation is not intended as a substitute for and is not to be used for determining suitability or reliability of these products for specific user applications

Complementary

Natural differential at low setting	16.5 bar (+/- 3 bar)
Natural differential at high setting	35 bar (+/- 6 bar)
Maximum permissible pressure - per cycle	375 bar
Terminal block type	4 terminals
Maximum operating rate	60 cyc/mn
Repeat accuracy	2 %
[Ui] rated insulation voltage	300 V conforming to UL 508 500 V conforming to EN/IEC 60947-1 300 V conforming to CSA C22.2 No 14
[Uimp] rated impulse withstand voltage	6 kV conforming to EN/IEC 60947-1
Auxiliary contacts operation	Snap action
Contacts material	Silver contacts
Maximum resistance across terminals	25 mOhm conforming to IEC 255-7 category 3 25 mOhm conforming to NF C 93-050 method A
Short-circuit protection	10 A cartridge fuse, type gG (gl)
Mechanical durability	3000000 cycles
Setting	External
Height	113 mm
Depth	75 mm
Width	35 mm
Net weight	0.75 kg

Environment

Standards	UL 508 EN/IEC 60947-5-1 CSA C22.2 No 14 CE
Product certifications	CCC CSA LROS (Lloyds register of shipping) UL BV EAC
Protective treatment	TC standard version
Ambient air temperature for operation	-25…70 °C
Ambient air temperature for storage	-40…70 °C
Operating position	Any position
Vibration resistance	4 gn conforming to IEC 60068-2-6 (f = 30…500 Hz)
Shock resistance	50 gn conforming to IEC 60068-2-27
Electrical shock protection class	Class I conforming to IEC 1140 Class I conforming to IEC 536 Class I conforming to NF C 20-030
IP degree of protection	IP66 conforming to EN/IEC 60529

Packing Units

Unit Type of Package 1	PCE
Number of Units in Package 1	1
Package 1 Weight	737.0 g
Package 1 Height	12.5 cm
Package 1 width	4.2 cm
Package 1 Length	8.5 cm
Unit Type of Package 2	S02
Number of Units in Package 2	13
Package 2 Weight	10.036 kg
Package 2 Height	15.0 cm
Package 2 width	30.0 cm
Package 2 Length	40.0 cm

Offer Sustainability

Sustainable offer status	Green Premium product
REACh Regulation	REACh Declaration
EU RoHS Directive	Pro-active compliance (Product out of EU RoHS legal scope) EU RoHS Declaration
Mercury free	Yes
RoHS exemption information	Yes
Environmental Disclosure	Product Environmental Profile
California proposition 65	WARNING: This product can expose you to chemicals including: Diisononyl phthalate (DINP), which is known to the State of California to cause cancer, and Di-isodecyl phthalate (DIDP), which is known to the State of California to cause birth defects or other reproductive harm. For more information go to www.P65Warnings.ca.gov

Contractual warranty

Warranty	18 months

Product data sheet XMLA300N2S11

Dimensions Drawings

Dimensions

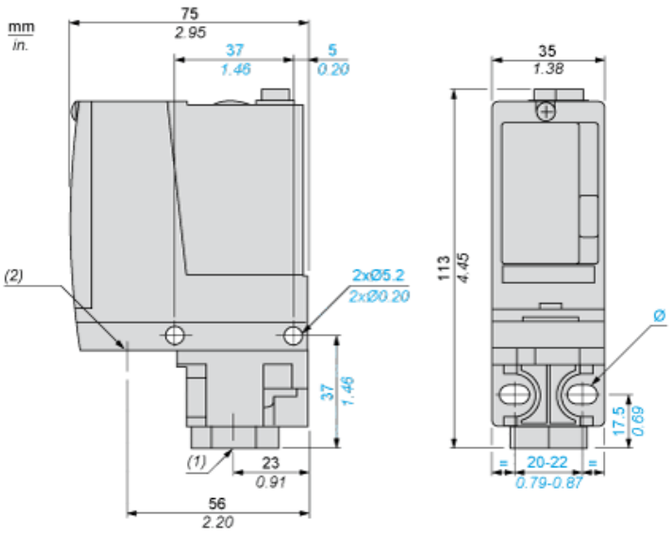

(1) 1 fluid entry, tapped G1/4 (BSP female)
(2) 1 electrical connections entry, tapped Pg 13.5
Ø : 2 elongated holes Ø 5.2 x 6.7

Wiring Diagram

Terminal Model

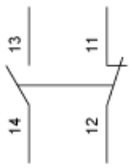

Operating Curves

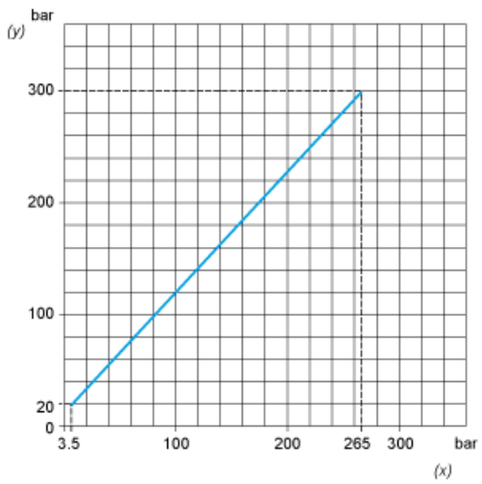

(y) Rising pressure
(x) Falling pressure

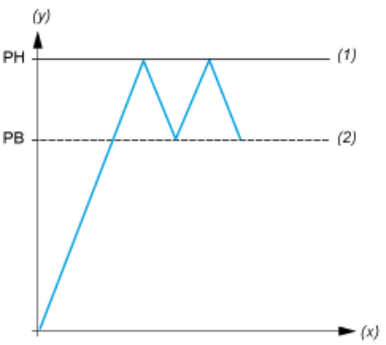

(y) Pressure
(x) Time
(1) Adjustable value
(2) Non adjustable value
PH : High point
PB : Below point