Rittal – The System.

Faster – better – everywhere.

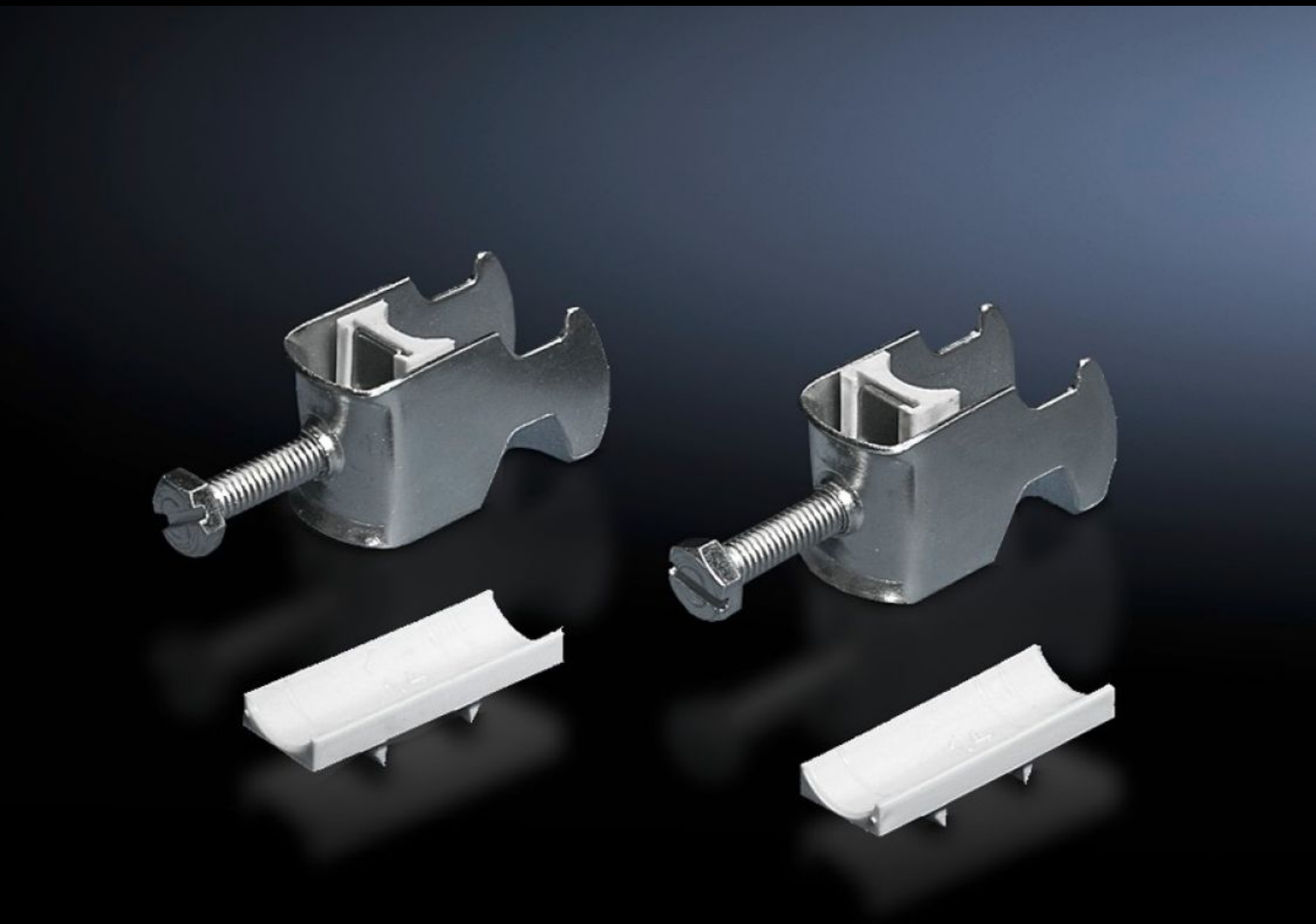

DK 7098.000

Cable clip

State: 1/2/2023 (Source: rittal.com/in-en)

DK 7098.000 - Cable clip for C rail, combination rail

For attaching cables to the C rail.

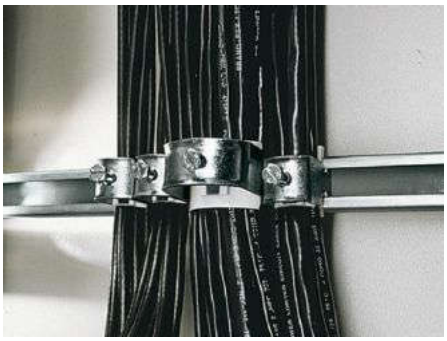

Features

Model No.	DK 7098.000
Design	for cable diameter 38 – 42 mm
Product description	For attaching cables to the C rail.
Material	Sheet steel
Surface finish	Zinc-plated
Supply includes	Plastic insert
Min. cable diameter	38 mm
Max. cable diameter	42 mm
Packs of	25 pc(s).
Weight/pack	2.125 kg
Copper weight (kg per piece)	0
Customs tariff number	73269098
EAN	4028177124547
ETIM 7.0	EC000454
ECLASS 8.0	23140202

Approvals

Approvals	GOST

Tender text

Cable clamps 38 - 42 mm
For attaching cables to C rails. For cable diameter 38 - 42 mm.
Material: sheet steel, zinc-plated, passivated, with plastic insert.