EBC019

Splitter box

ZDO6H057MSS0005H09

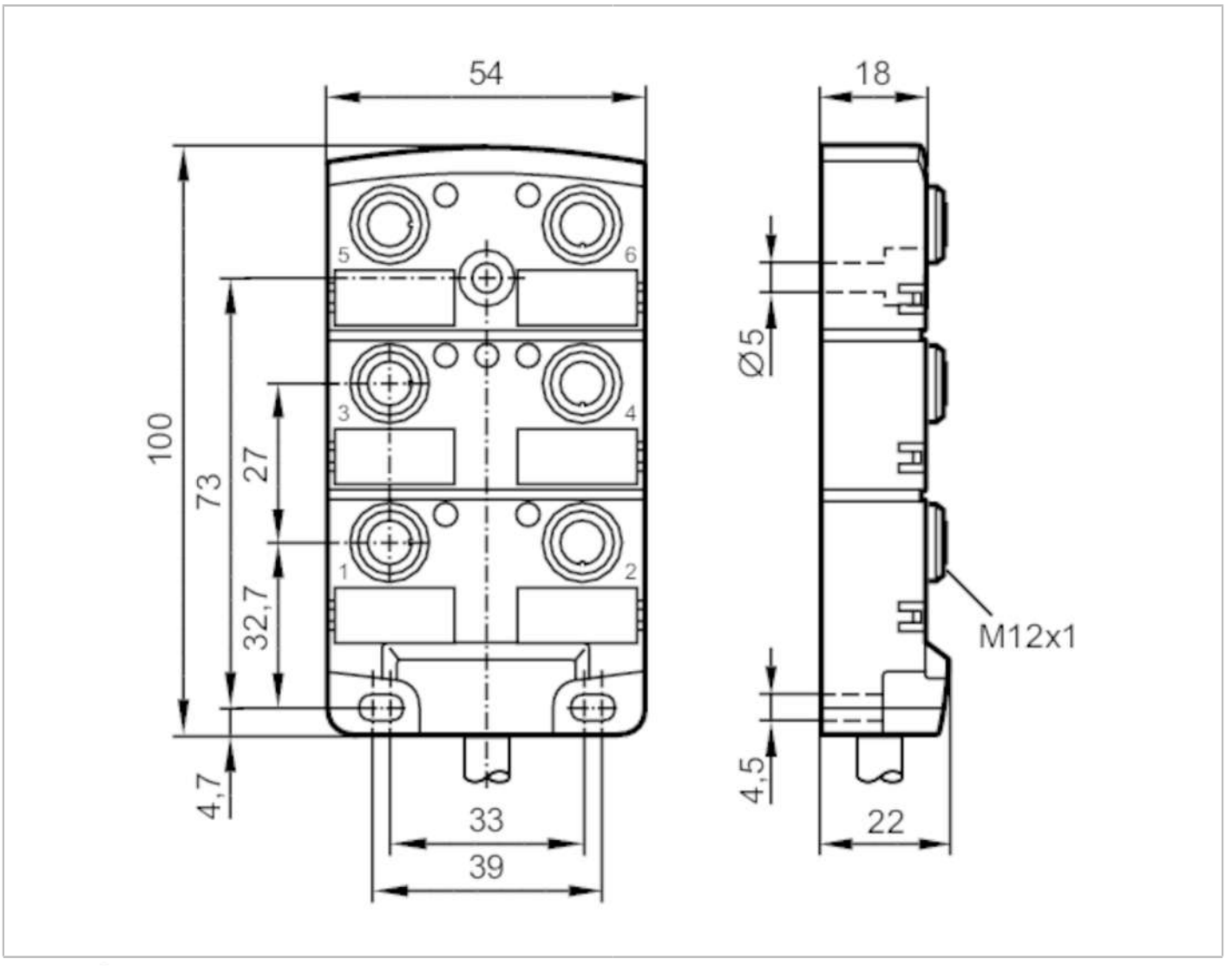

Application		
Special feature		Free from silicone; Halogen-free; Gold-plated contacts; Drag chain suitability
Free from silicone		yes
Electrical data		
Operating voltage	[V]	10...30 DC; ("supply class 2" to cULus)
Protection class		II
Max. current load per module/slot	[A]	4
Max. current load total	[A]	12
Outputs		
Electrical design		PNP
Operating conditions		
Ambient temperature	[°C]	-25...80
Ambient temperature (moving)	[°C]	-5...60

EBC019

Splitter box

ZDO6H057MSS0005H09

Protection		IP 67; IP 68	
Tests / approvals			
UL approval		Enclosure type	Type 1
Mechanical data			
Weight	[g]	530.6	
Dimensions	[mm]	22 x 54 x 100	
Materials		PA	
Moulded-body material		PA	
Number of ports splitter box		6	
Connector type		M12	
Drag chain suitability		yes	
Drag chain suitability		bending radius for flexible use	min. 10 x cable diameter
		bending cycles	> 2 Mio.
Displays / operating elements			
Display		switching status	6 x LED, yellow
		operation	1 x LED, green
Accessories			
Items supplied		Protective caps: 2	
		labels: 6	
Remarks			
Pack quantity		1 pcs.	

Electrical connection

Cable: 5 m, PUR, Halogen-free, black, Ø 7.8 mm; 6 x 0.34 mm² (43 x Ø 0.1 mm) + 3 x 1 mm² (55 x Ø 0.15 mm)

Electrical connection - slot

Connector: 6 x M12; coding: A; Moulded body: PA; Contacts: gold-plated; Tightening torque: 0.8...1.5 Nm

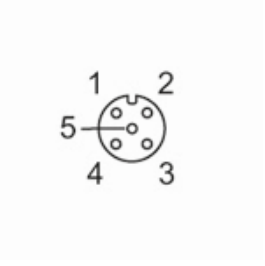

EBC019

Splitter box

ZDO6H057MSS0005H09

Connection

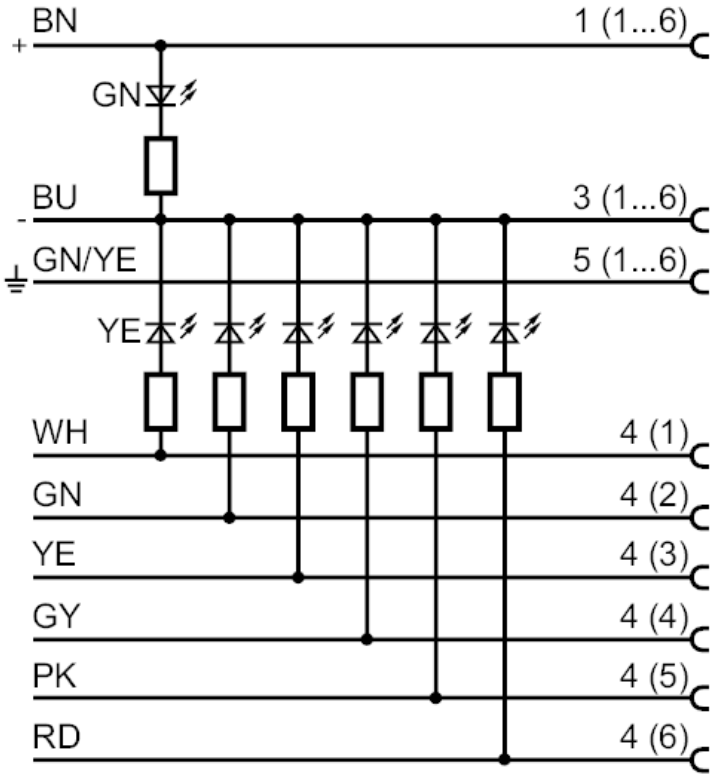

	Core colours :
BN =	brown
BU =	blue
GN =	green
GN/YE =	green/yellow
GY =	grey
PK =	pink
RD =	red
WH =	white
YE =	yellow