8BAC0125.000-1

1 General information

The plug-in module 8BAC0125.000-1 can be used in an ACOPOSmulti slot. The module contains a serial RS485 interface as well as an interface for evaluating sinusoidal output signals.

The following functions and protocols can be selected by configuring the appropriate parameters (using a higher-level controller).

- SSI, serial
- SSI SinCos, serial with evaluation of sinusoidal output signals
- EnDat 2.1, serial with evaluation of sinusoidal output signals
- BiSS (MODE C), serial [1)]

Material	BiSS functionality for 8BAC0125.000-1 available starting with revision
8BVI0014HxD0.000-1	K0
8BVI0014HCS0.000-1	K0
8BVI0014HWS0.000-1	J0
8BVI0028HxD0.000-1	K0
8BVI0028HxS0.000-1	K0
8BVI0055HCD0.000-1	N0
8BVI0055HWD0.000-1	M0
8BVI0055HxS0.000-1	L0
8BVI0110HxD0.000-1	H0
8BVI0110HxS0.000-1	L0
8BVI0220HxD0.000-1	H0
8BVI0220HxS0.000-1	N0
8BVI0330HxS0.000-1	F0
8BVI0440HxS0.000-1	N0
8BVI0660HxS0.000-1	D0
8BVI0880HxS0.004-1	G0
8BVI1650HxS0.000-1	C0
8BVP0220Hx00.000-1	J0
8BVP0440Hx00.000-1	N0
8BVP0880Hx00.004-1	G0
8BVP1650Hx00.000-1	C0

Table 1: BiSS functionality with 8BAC0125.000-1 - Minimum revision of the ACOPOSmulti modules

This module can be used to evaluate encoders installed in B&R servo motors as well as encoders for external axes (encoders that scan any machine movement). The input signals are monitored. This makes it possible to detect open circuits, conductor faults and failures in the encoder power supply. [2)]

1) Starting with ACP10 firmware V2.370.
2) Not for SSI functionality.

2 Order data

Order number	Short description	Figure
	Plug-in modules	
8BAC0125.000-1	ACOPOSmulti plug-in module, SinCos EnDat 2.1/SSI/BiSS interface	
	Optional accessories	
	EnDat 2.1 cables	
8BCE0005.1111A-0	ACOPOSmulti EnDat 2.1 cable, length 5 m, 10x 0.14 mm² + 2x 0.5 mm², 17-pin female speedtec EnDat connector, 15-pin male DSUB servo connector, can be used in cable drag chains	
8BCE0007.1111A-0	ACOPOSmulti EnDat 2.1 cable, length 7 m, 10x 0.14 mm² + 2x 0.5 mm², 17-pin female speedtec EnDat connector, 15-pin male DSUB servo connector, can be used in cable drag chains	
8BCE0010.1111A-0	ACOPOSmulti EnDat 2.1 cable, length 10 m, 10x 0.14 mm² + 2x 0.5 mm², 17-pin female speedtec EnDat connector, 15-pin male DSUB servo connector, can be used in cable drag chains	
8BCE0015.1111A-0	ACOPOSmulti EnDat 2.1 cable, length 15 m, 10x 0.14 mm² + 2x 0.5 mm², 17-pin female speedtec EnDat connector, 15-pin male DSUB servo connector, can be used in cable drag chains	
8BCE0020.1111A-0	ACOPOSmulti EnDat 2.1 cable, length 20 m, 10x 0.14 mm² + 2x 0.5 mm², 17-pin female speedtec EnDat connector, 15-pin male DSUB servo connector, can be used in cable drag chains	
8BCE0025.1111A-0	ACOPOSmulti EnDat 2.1 cable, length 25 m, 10x 0.14 mm² + 2x 0.5 mm², 17-pin female speedtec EnDat connector, 15-pin male DSUB servo connector, can be used in cable drag chains	

Table 2: 8BAC0125.000-1 - Order data

3 Technical data

Order number	8BAC0125.000-1
General information	
Module type	ACOPOSmulti plug-in module
B&R ID code	0xD59E
Slot [1]	Slots 1 and 2
Max. power consumption	P_{Module} [mW] = 25 V * ($I_{Encoder}$ [mA] * 0.4 + 25 mA)
Certifications	
CE	Yes
UKCA	Yes
UL	cULus E225616 Power conversion equipment
KC	Yes
Encoder inputs [2]	
Quantity	1
Module-side connection	15-pin male DSUB connector
Status indicators	UP/DN LEDs
Electrical isolation	
Encoder - ACOPOSmulti	No
Encoder monitoring	Yes
Max. encoder cable length	75 m
Sine/Cosine inputs	
Signal transmission	Differential signals, symmetrical
Signal frequency (-3 dB)	DC up to 300 kHz
Signal frequency (-5 dB)	DC up to 400 kHz
Common-mode voltage	Max. ±7 V
Terminating resistor	120 Ω
Resolution	12-bit
Encoder power supply	
Output voltage	5 V ±5%
Load capacity	250 mA [3]
Sense lines	2, compensation of max. 2 x 0.7 V
Position	
Resolution @ 1 V_{SS}	Number of encoder lines * 5700
Synchronous serial interface	
Signal transmission	RS485
Data transfer rate	Depends on the configured functionality [4]
Ambient conditions	
Temperature	
Operation	
Nominal	5 to 40°C
Maximum	55°C
Storage	-25 to 55°C
Transport	-25 to 70°C

Table 3: 8BAC0125.000-1 - Technical data

Order number	8BAC0125.000-1
Relative humidity	
Operation	5 to 85% 5)
Storage	5 to 95%
Transport	Max. 95% at 40°C

Table 3: 8BAC0125.000-1 - Technical data

1) The 8BAC0125.000-1 is an encoder module. Up to two encoder modules can be connected. In this case, the encoder module in the first slot automatically serves as motor feedback for the first axis; the encoder module in the second slot serves as motor feedback for the second axis. In 1-axis mode, the second slot can be used for other purposes.
2) The encoder must be wired with a single shielded cable.
3) An additional reserve of 57 mA is available for terminating resistors.
4) EnDat 2.1 ... 781.25 kbit/s, SSI ... 100 to 400 kbit/s, BiSS ... 1560 kbit/s.
5) ACOPOSmulti plug-in modules can only be used in an ACOPOSmulti inverter or power supply module; for the corresponding values, see the technical data of the respective ACOPOSmulti inverter or power supply module.

4 Wiring

4.1 Pinout

Figure	X11	Pin	Description	Function			
				SSI SinCos	EnDat 2.1	BiSS	SSI
	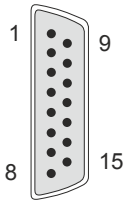	1	A	Channel A		---	
		2	COM	Encoder power supply 0 V			
		3	B	Channel B		---	
		4	+5 V	Encoder power supply +5 V			
		5	D	Data input			
		6	---	---			
		7	T+	Temperature sensor +			
		8	T	Clock output			
		9	A\	Channel A inverted		---	
		10	Sense COM	Sense input 0 V			
		11	B\	Channel B inverted		---	
		12	Sense +5 V	Sense input +5 V			
		13	D\	Data input inverted			
		14	T-	Temperature sensor -			
		15	T\	Clock output inverted			

Table 4: SinCos EnDat 2.1 / SSI / BiSS interface 8BAC0125.000-1 - Pinout

Danger!

The connections for the encoders are isolated circuits. These connections are therefore only permitted to be connected to devices or components that have sufficient isolation per IEC 60364-4-41 or EN 61800-5-1.

4.2 Input/Output circuit diagram

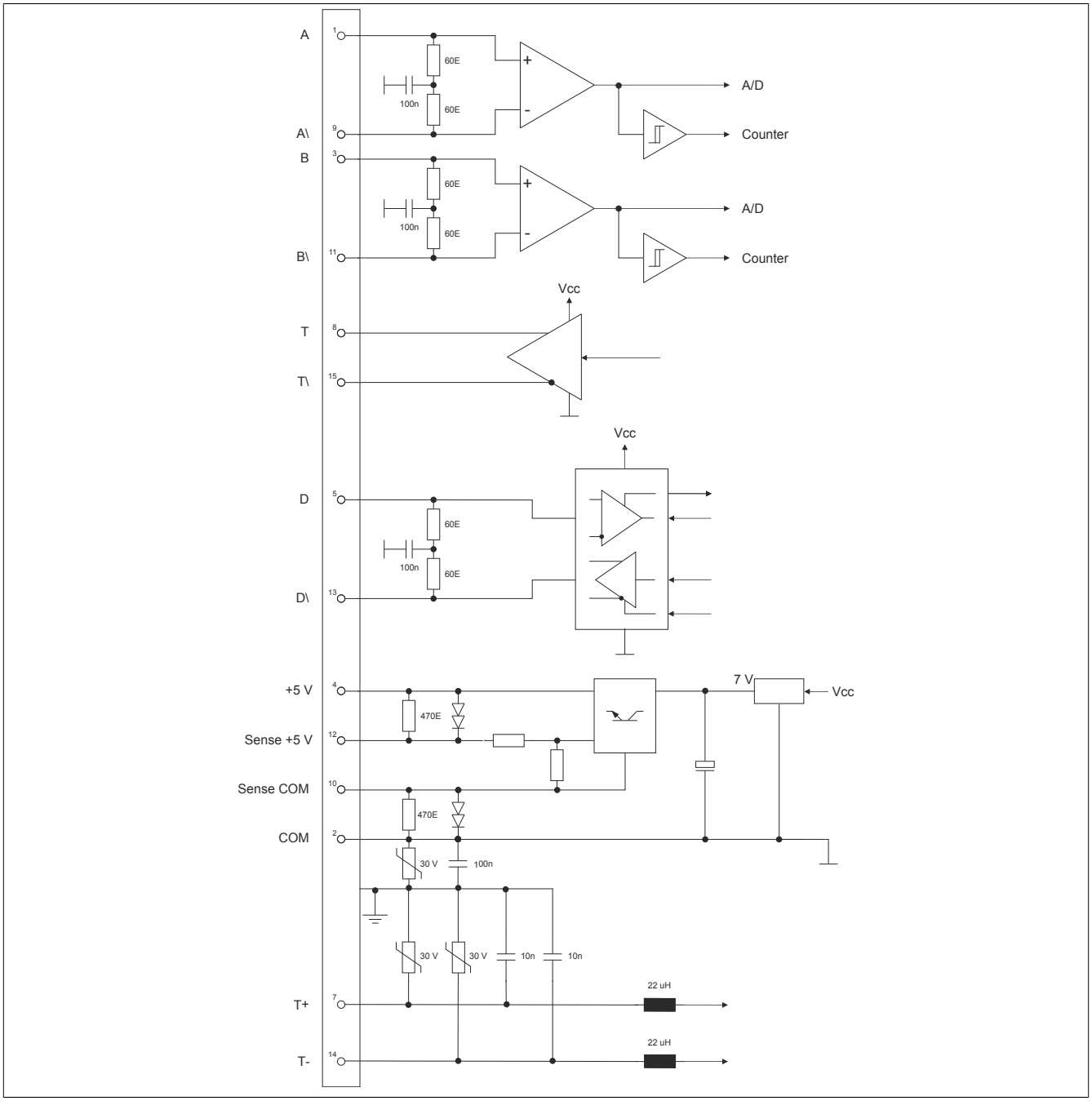

Figure 1: SinCos EnDat 2.1 / SSI / BiSS interface 8BAC0125.000-1 - Input/Output circuit diagram

5 Status indicators

The indicators (LEDs UP/DN) are located on the front of the ACOPOSmulti drive or power supply module where the plug-in module is installed.

The UP/DN LEDs are lit depending on the rotational direction and the speed of the connected encoder. [3)]

UP LED ... indicates when the encoder position changes in the positive direction.
DN LED ... indicates when the encoder position changes in the negative direction.

6 Firmware

The firmware is part of the operating system for the ACOPOSmulti drive system. Firmware is updated by updating the ACOPOSmulti operating system.

3) The count direction of the encoder can be configured in Automation Studio. Changing the counting direction in Automation Studio does not change the actual counting direction of the encoder, however, and therefore has no effect on the UP/DN LEDs!